Z:\~Project Directories\6200-6299\6277 - Republic Wire\~Construction Documents\6277-E5-0-ELECTRICAL-DETAILS.dwg-EBS, Plot Date/Time: May 25, 2017-8:13pm - By: jason.rinderle
THESE DRAWINGS AND SPECIFICATIONS ARE NOT AUTHORIZED TO BE USED AS CONTRACT DOCUMENTS. THESE DRAWINGS HAVE BEEN PREPARED TO DEMONSTRATE COMPLIANCE WITH APPLICABLE CODES, AND ARE INTENDED TO PROVIDE THE AUTHORITIES HAVING JURISDICTION WITH INFORMATION TO DETERMINE CODE COMPLIANCE. THE INSTALLING CONTRACTOR IS RESPONSIBLE TO ENSURE THAT MEANS, METHODS, AND MATERIALS USED IN CONSTRUCTION ARE INSTALLED IN ACCORDANCE WITH ANY CONTRACTURAL AGREEMENT THAT MAY EXIST WITH AN OWNER, CONSTRUCTION MANAGER, GENERAL CONTRACTOR, ETC.

## Panel HV-1

ROOM
MOUNTING **FLUSH**
FED FROM **MDB-2A**
NOTE

VOLTS **480Y/277V 3P 4W**
BUS AMPS **200**
NEUTRAL **100%**

AIC **T.B.D.**
MAIN BKR **MLO**
LUGS **STANDARD**

| CKT # | CKT BKR | LOAD KVA | CIRCUIT DESCRIPTION | | CKT # | CKT BKR | LOAD KVA | CIRCUIT DESCRIPTION |
|---|---|---|---|---|---|---|---|---|
| 1 | 30/1 | 4.79 | H-1 | a | 2 | 25/3 | 16.6 | RTU-3 |
| 3 | 20/1 | 1.66 | E-4 | b | 4 | \| | | |
| 5 | 20/1 | 1.66 | E-4 | c | 6 | \| | | |
| 7 | 20/1 | 1.66 | E-4 | a | 8 | 20/1 | 0.51 | LIGHTING |
| 9 | 20/1 | 1.66 | E-4 | b | 10 | 20/1 | 3.12 | LIGHTING |
| 11 | 20/1 | 3.38 | LIGHTING | c | 12 | 30/1 | 5.53 | LIGHTING |
| 13 | 20/1 | 3.07 | LIGHTING | a | 14 | 30/1 | 5.83 | LIGHTING |
| 15 | 20/1 | 3.68 | LIGHTING | b | 16 | 40/1 | 7.06 | LIGHTING |
| 17 | 30/1 | 4.61 | LIGHTING | c | 18 | 20/1 | 3.68 | LIGHTING |
| 19 | 20/1 | 1.23 | LIGHTING | a | 20 | 20/1 | 4.3 | LIGHTING |
| 21 | 20/1 | 0 | SPACE | b | 22 | 20/1 | 2.76 | LIGHTING |
| 23 | 20/1 | 0 | SPACE | c | 24 | 20/1 | 2.76 | LIGHTING |
| 25 | 20/1 | 0 | SPACE | a | 26 | 20/1 | 0 | SPACE |
| 27 | 20/1 | 0 | SPACE | b | 28 | 20/1 | 0 | SPACE |
| 29 | 20/1 | 0 | SPACE | c | 30 | 20/1 | 0 | SPACE |
| 31 | 20/1 | 0 | SPACE | a | 32 | 20/1 | 0 | SPACE |
| 33 | 20/1 | 0 | SPACE | b | 34 | 20/1 | 0 | SPACE |
| 35 | 20/1 | 0 | SPACE | c | 36 | 20/1 | 0 | SPACE |
| 37 | 20/1 | 0 | SPACE | a | 38 | 100/3 | 21 | XFMR T1 |
| 39 | 20/1 | 0 | SPACE | b | 40 | \| | | |
| 41 | 20/1 | 0 | SPACE | c | 42 | \| | | |

| | CONN KVA | CALC KVA | | | CONN KVA | CALC KVA | |
|---|---|---|---|---|---|---|---|
| LIGHTING | 52.1 | 65.2 | (125%) | CONTINUOUS | 8 | 10 | (125%) |
| LARGEST MOTOR | 16.6 | 4.16 | (25%) | HEATING | 17.1 | 17.1 | (100%) |
| OTHER MOTORS | 19.6 | 19.6 | (100%) | COOLING | 17.1 | 0 | (0%) |
| RECEPTACLES | 3.78 | 3.78 | (50%>10) | NONCONTINUOUS | 0 | 0 | (100%) |
| KITCHEN EQUIP | 0 | 0 | (N/A) | DIVERSE | 0 | 0 | (N/A) |
| | | | | METERED DEMAND | 0 | 0 | (125%) |
| | | | | TOTAL KVA | 101 | 120 | |
| | | | | BALANCED 3-PHASE AMPS | | 144 | |

PHASE BALANCE PERCENT: PHASE A **103%** PHASE B **97.1%** PHASE C **100%**

## Panel LV-1

ROOM
MOUNTING **FLUSH**
FED FROM **T1**
NOTE

VOLTS **208Y/120V 3P 4W**
BUS AMPS **200**
NEUTRAL **100%**

AIC **T.B.D.**
MAIN BKR **200**
LUGS **STANDARD**

| CKT # | CKT BKR | LOAD KVA | CIRCUIT DESCRIPTION | | CKT # | CKT BKR | LOAD KVA | CIRCUIT DESCRIPTION |
|---|---|---|---|---|---|---|---|---|
| 1 | 20/1 | 1.26 | RECEPTACLE | a | 2 | 20/2 | 2 | HAND DRYER |
| 3 | 20/1 | 1.08 | RECEPTACLE | b | 4 | \| | | |
| 5 | 20/1 | 0.888 | LIGHTING, RECEPTACLE | c | 6 | 20/2 | 2 | HAND DRYER |
| 7 | 25/1 | 0.444 | H-2 | a | 8 | \| | | |
| 9 | 20/2 | 2 | HAND DRYER | b | 10 | 20/1 | 0.46 | E-1, RECEPTACLE |
| 11 | \| | | | c | 12 | 30/1 | 2 | WTR FNTN |
| 13 | 20/1 | 0.46 | E-2, RECEPTACLE | a | 14 | 30/2 | 4 | WTR HTR |
| 15 | 20/1 | 0.423 | LIGHTING | b | 16 | \| | | |
| 17 | 20/1 | 0 | SPACE | c | 18 | 30/2 | 4 | WTR HTR |
| 19 | 20/1 | 0 | SPACE | a | 20 | \| | | |
| 21 | 20/1 | 0 | SPACE | b | 22 | 20/1 | 0 | SPACE |
| 23 | 20/1 | 0 | SPACE | c | 24 | 20/1 | 0 | SPACE |
| 25 | 20/1 | 0 | SPACE | a | 26 | 20/1 | 0 | SPACE |
| 27 | 20/1 | 0 | SPACE | b | 28 | 20/1 | 0 | SPACE |
| 29 | 20/1 | 0 | SPACE | c | 30 | 20/1 | 0 | SPACE |
| 31 | 20/1 | 0 | SPACE | a | 32 | 20/1 | 0 | SPACE |
| 33 | 20/1 | 0 | SPACE | b | 34 | 20/1 | 0 | SPACE |
| 35 | 20/1 | 0 | SPACE | c | 36 | 20/1 | 0 | SPACE |
| 37 | 20/1 | 0 | SPACE | a | 38 | 20/1 | 0 | SPACE |
| 39 | 20/1 | 0 | SPACE | b | 40 | 20/1 | 0 | SPACE |
| 41 | 20/1 | 0 | SPACE | c | 42 | 20/1 | 0 | SPACE |

| | CONN KVA | CALC KVA | | | CONN KVA | CALC KVA | |
|---|---|---|---|---|---|---|---|
| LIGHTING | 0.591 | 0.739 | (125%) | CONTINUOUS | 8 | 10 | (125%) |
| LARGEST MOTOR | 2 | 2.5 | (125%) | HEATING | 0.444 | 0.444 | (100%) |
| OTHER MOTORS | 6.2 | 6.2 | (100%) | COOLING | 0.444 | 0 | (0%) |
| RECEPTACLES | 3.78 | 3.78 | (50%>10) | NONCONTINUOUS | 0 | 0 | (100%) |
| KITCHEN EQUIP | 0 | 0 | (N/A) | DIVERSE | 0 | 0 | (N/A) |
| | | | | METERED DEMAND | 0 | 0 | (125%) |
| | | | | TOTAL KVA | 21 | 23.7 | |
| | | | | BALANCED 3-PHASE AMPS | | 65.7 | |

PHASE BALANCE PERCENT: PHASE A **115%** PHASE B **85.9%** PHASE C **98.7%**

## Panel OP

ROOM
MOUNTING **FLUSH**
FED FROM **UTILITY**
NOTE

VOLTS **208Y/120V 3P 4W**
BUS AMPS **200**
NEUTRAL **100%**

AIC **T.B.D.**
MAIN BKR **MLO**
LUGS **STANDARD**

| CKT # | CKT BKR | LOAD KVA | CIRCUIT DESCRIPTION | | CKT # | CKT BKR | LOAD KVA | CIRCUIT DESCRIPTION |
|---|---|---|---|---|---|---|---|---|
| 1 | 20/1 | 1.08 | LIGHTING | a | 2 | 20/1 | 1.44 | RECEPTACLE |
| 3 | 20/1 | 1.27 | LIGHTING | b | 4 | 20/1 | 1.62 | RECEPTACLE |
| 5 | 20/1 | 1.74 | LIGHTING | c | 6 | 20/1 | 1.8 | RECEPTACLE |
| 7 | 20/1 | 0 | SPACE | a | 8 | 20/1 | 1.8 | RECEPTACLE |
| 9 | 20/1 | 0 | SPACE | b | 10 | 20/1 | 1.44 | RECEPTACLE |
| 11 | 20/1 | 0 | SPACE | c | 12 | 20/1 | 0 | SPACE |
| 13 | 20/1 | 0 | SPACE | a | 14 | 20/1 | 0 | SPACE |
| 15 | 20/1 | 0 | SPACE | b | 16 | 20/1 | 0 | SPACE |
| 17 | 20/1 | 0 | SPACE | c | 18 | 20/1 | 0 | SPACE |
| 19 | 20/1 | 0 | SPACE | a | 20 | 20/1 | 0 | SPACE |
| 21 | 20/1 | 0 | SPACE | b | 22 | 20/1 | 0 | SPACE |
| 23 | 20/1 | 0 | SPACE | c | 24 | 20/1 | 0 | SPACE |
| 25 | 20/1 | 0 | SPACE | a | 26 | 20/1 | 0 | SPACE |
| 27 | 20/1 | 0 | SPACE | b | 28 | 20/1 | 0 | SPACE |
| 29 | 20/1 | 0 | SPACE | c | 30 | 20/1 | 0 | SPACE |
| 31 | 20/1 | 0 | SPACE | a | 32 | 20/1 | 0 | SPACE |
| 33 | 20/1 | 0 | SPACE | b | 34 | 20/1 | 0 | SPACE |
| 35 | 20/1 | 0 | SPACE | c | 36 | 20/1 | 0 | SPACE |
| 37 | 20/1 | 0 | SPACE | a | 38 | 20/1 | 0 | SPACE |
| 39 | 20/1 | 0 | SPACE | b | 40 | 20/1 | 0 | SPACE |
| 41 | 20/1 | 0 | SPACE | c | 42 | 20/1 | 0 | SPACE |

| | CONN KVA | CALC KVA | | | CONN KVA | CALC KVA | |
|---|---|---|---|---|---|---|---|
| LIGHTING | 4.08 | 5.1 | (125%) | CONTINUOUS | 0 | 0 | (125%) |
| LARGEST MOTOR | 0 | 0 | (N/A) | HEATING | 0 | 0 | (N/A) |
| OTHER MOTORS | 0 | 0 | (100%) | COOLING | 0 | 0 | (N/A) |
| RECEPTACLES | 8.1 | 8.1 | (50%>10) | NONCONTINUOUS | 0 | 0 | (100%) |
| KITCHEN EQUIP | 0 | 0 | (N/A) | DIVERSE | 0 | 0 | (N/A) |
| | | | | METERED DEMAND | 0 | 0 | (125%) |
| | | | | TOTAL KVA | 12.2 | 13.2 | |
| | | | | BALANCED 3-PHASE AMPS | | 36.6 | |

PHASE BALANCE PERCENT: PHASE A **106%** PHASE B **107%** PHASE C **87.2%**

## ELECTRICAL LEGEND

SEE LIGHT FIXTURE SCHEDULE FOR FIXTURE TYPES.

- $ SINGLE POLE LIGHT SWITCH
- $3 THREE WAY LIGHT SWITCH
- $4 FOUR WAY LIGHT SWITCH
- $D DIMMER SWITCH
- PANELBOARD
- SPECIAL CONNECTION
- SIMPLEX RECEPTACLE
- DUPLEX RECEPTACLE
- SPLIT-WIRED DUPLEX RECEPTACLE
- QUAD RECEPTACLE
- SPLIT-WIRED QUAD RECEPTACLE
- DUPLEX RECEPTACLE MOUNTED IN CEILING/FLOOR
- SPLIT-WIRED QUAD RECEPTACLE MOUNTED IN CEILING/FLOOR
- W WALL MOUNTED PHONE
- VOICE ONLY LOCATION
- DATA ONLY LOCATION
- DATA/VOICE LOCATION
- TV TELEVISION LOCATION
- EQUIPMENT CONNECTION
- M MANUAL MOTOR STARTER
- NON-FUSED DISCONNECT
- FUSED DISCONNECT
- FUSED DISCONNECT WITH MAGNETIC MOTOR STARTER
- JUNCTION BOX

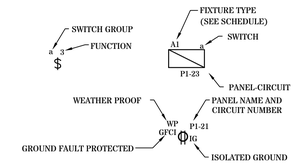


ABBREVIATIONS:

| | |
|---|---|
| AFF | ABOVE FINISHED FLOOR |
| AHU | AIR HANDLING UNIT |
| BF | BATHROOM EXHAUST FAN |
| DWG | DRAWING |
| DWH | DOMESTIC WATER HEATER |
| HP | HEAT PUMP OR HORSEPOWER |
| HVAC | HEATING, VENTILATING & AIR CONDITIONING |
| MIN | MINIMUM |
| NTS | NOT TO SCALE |
| TSTAT | THERMOSTAT |
| TYP | TYPICAL |
| UH | UNIT HEATER |
| UNO | UNLESS NOTED OTHERWISE |

NOTE: ALL ITEMS MAY NOT BE USED.

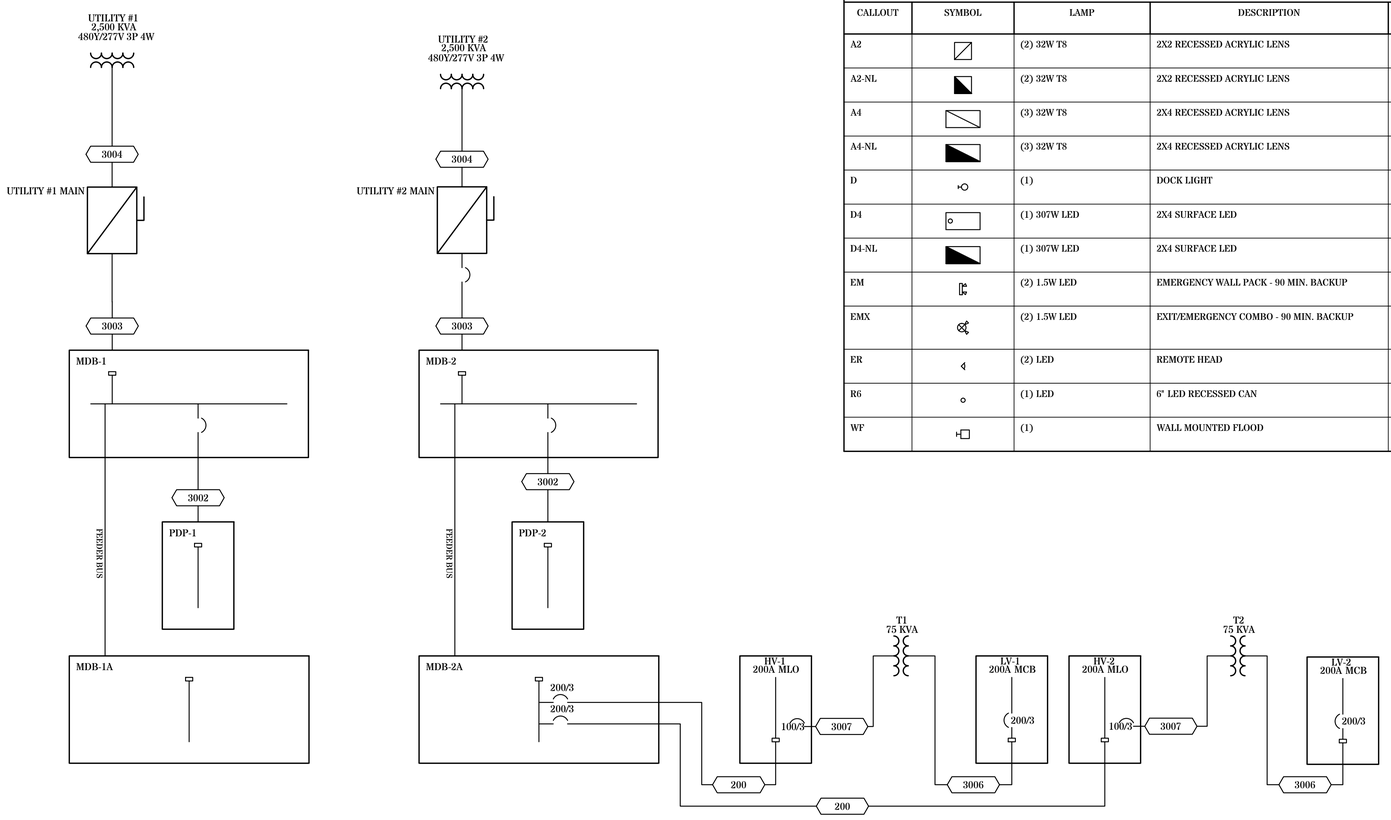


## LIGHT FIXTURE SCHEDULE

| CALLOUT | SYMBOL | LAMP | DESCRIPTION | MODEL | INPUT WATTS | NOTE 1 |
|---|---|---|---|---|---|---|
| A2 | | (2) 32W T8 | 2X2 RECESSED ACRYLIC LENS | | 56 | |
| A2-NL | | (2) 32W T8 | 2X2 RECESSED ACRYLIC LENS | | 56 | |
| A4 | | (3) 32W T8 | 2X4 RECESSED ACRYLIC LENS | | 84 | |
| A4-NL | | (3) 32W T8 | 2X4 RECESSED ACRYLIC LENS | | 84 | |
| D | | (1) | DOCK LIGHT | | 64 | |
| D4 | | (1) 307W LED | 2X4 SURFACE LED | HUBBEL HBLED-LD4-36-W-UNV-L850-ED3-U | 307 | |
| D4-NL | | (1) 307W LED | 2X4 SURFACE LED | HUBBEL HBLED-LD4-36-W-UNV-L850-ED3-U | 307 | |
| EM | | (2) 1.5W LED | EMERGENCY WALL PACK - 90 MIN. BACKUP | | 3 | |
| EMX | | (2) 1.5W LED | EXIT/EMERGENCY COMBO - 90 MIN. BACKUP | | 3 | PROVIDE BATTERY CAPACITY FOR REMOTE AS REQ'D |
| ER | | (2) LED | REMOTE HEAD | | | POWERED FROM LOCAL EXIT SIGN BATTERY |
| R6 | | (1) LED | 6" LED RECESSED CAN | | 15 | |
| WF | | (1) | WALL MOUNTED FLOOD | | 64 | |

## FEEDER SCHEDULE

| ID | CONDUIT AND FEEDER |
|---|---|
| 200 | 2-1/2"C,3#250kcmil AL,#250kcmil AL N,#4 AL G |
| 3002 | (3)3-1/2"C,3#600kcmil CU,#600kcmil CU N,#3/0 CU G |
| 3003 | (8)3-1/2"C,3#500kcmil CU,#500kcmil CU N,#500kcmil CU G |
| 3004 | (8)3"C,3#500kcmil CU,#500kcmil CU N |
| 3006 | 2-1/2"C,3#250kcmil AL,#250kcmil AL N,#2 AL G |
| 3007 | 1-1/4"C,3#2 CU |

SIZING METHOD: COMPACT AL 75°C 100A AND ABOVE, CU 75°C BELOW 100A

STATE OF OHIO
PAUL R. SARRONG
PE 74471
REGISTERED
PROFESSIONAL ENGINEER

25 MAY 2017

MSP
McGill Smith Punshon, Inc.
3700 Park 42 Drive Suite 190B
Cincinnati, Ohio 45241-2097
Tel. 513-759-0004 ▪ Fax 513-563-7099
Engineers ▪ Architects ▪ Surveyors
Planners ▪ Landscape Architects

Drawn by JHR Project Mgr. KPO
Checked by PRS

| Issue/ Revision | Revision Number | Date |
|---|---|---|
| BID / PERMIT | | 05/25/17 |

PR-06164
ENGINEERED BUILDING SYSTEMS INC.
TEAMWORK • COLLABORATION
SHARED SUCCESS
515 Monmouth Street, Suite 204
Newport, KY 41071 (859) 261-0585
MEP Consulting Services, Inc. in OH
Copyright © 2015
THIS DOCUMENT IS THE PRODUCT AND EXCLUSIVE PROPERTY OF ENGINEERED BUILDING SYSTEMS, INC. NEITHER THE DOCUMENT NOR THE INFORMATION IT CONTAINS MAY BE USED FOR OTHER THAN THE SPECIFIC PURPOSE FOR WHICH IT WAS PREPARED WITHOUT WRITTEN CONSENT OF ENGINEERED BUILDING SYSTEMS, INC.

# RENOVATIONS AND ADDITIONS FOR *Republic Wire*

UNION CENTRE DRIVE
WEST CHESTER, OHIO 45069

Sheet Title
ELECTRICAL DETAILS

Project No. 97333.33
Scale AS NOTED
Sheet No. E5.0