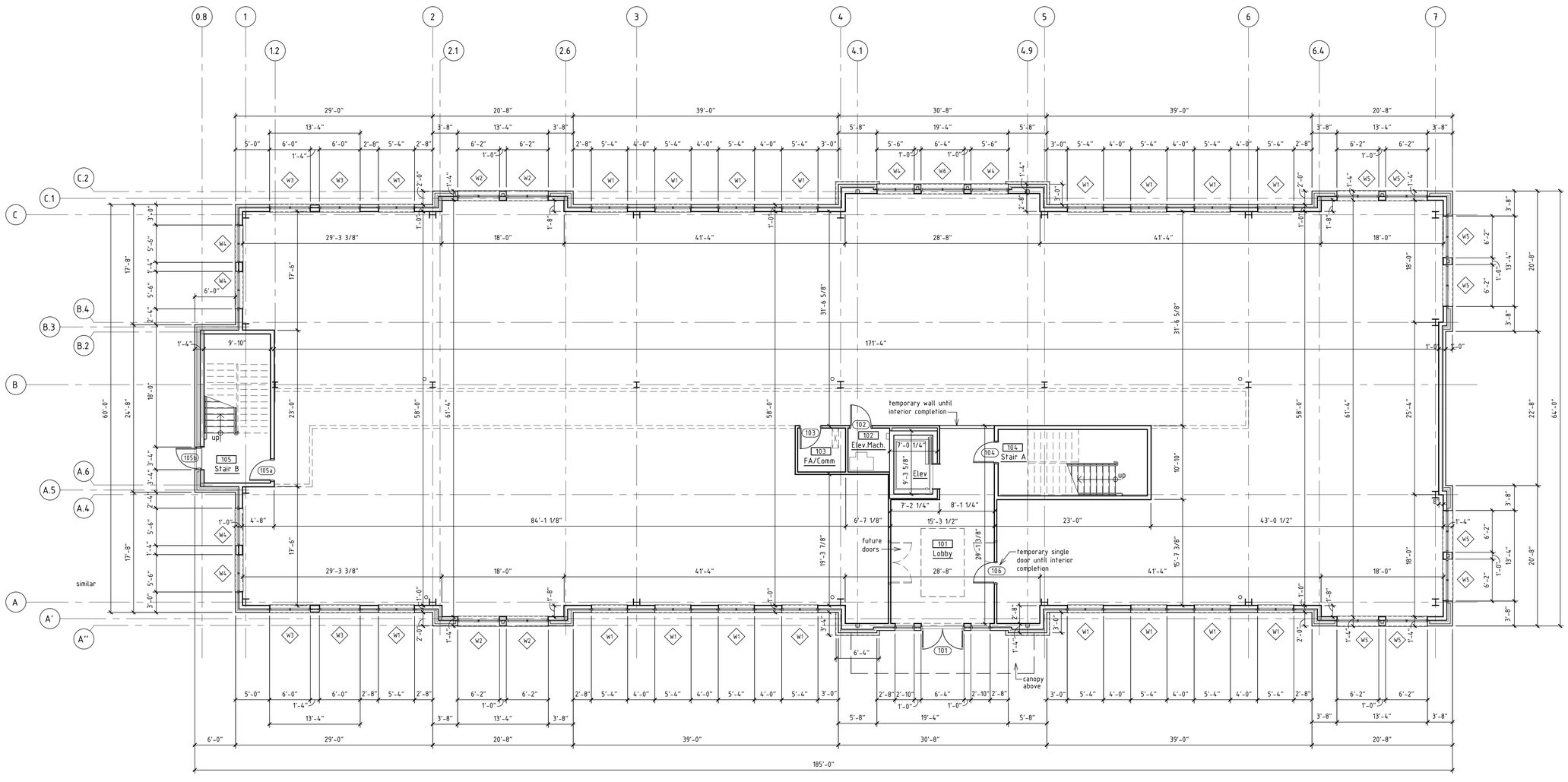

1 A1.1 First Floor Plan
1/8" = 1'-0"

New Shell Building
Heritage Park West
3125 Rogers Road
Wake Forest, North Carolina

MAURER ARCHITECTURE, PA
Registered Architectural Corporation
51562
North Carolina
RALEIGH, NC

PRELIMINARY NOT FOR CONSTRUCTION
DAVID SCOTT MAURER
REGISTERED ARCHITECT
5131
NORTH CAROLINA
RALEIGH, NC

MAURER ARCHITECTURE
115.5 EAST HARGETT STREET, SUITE 300
RALEIGH, NORTH CAROLINA 27601
TEL. 919-829-4969 FAX. 919-829-0860

DATE	11.22.16
DR.	mm
CH.	mm
PROJ. #	16096
REVISIONS	DATE

First Floor Plan

A1.1

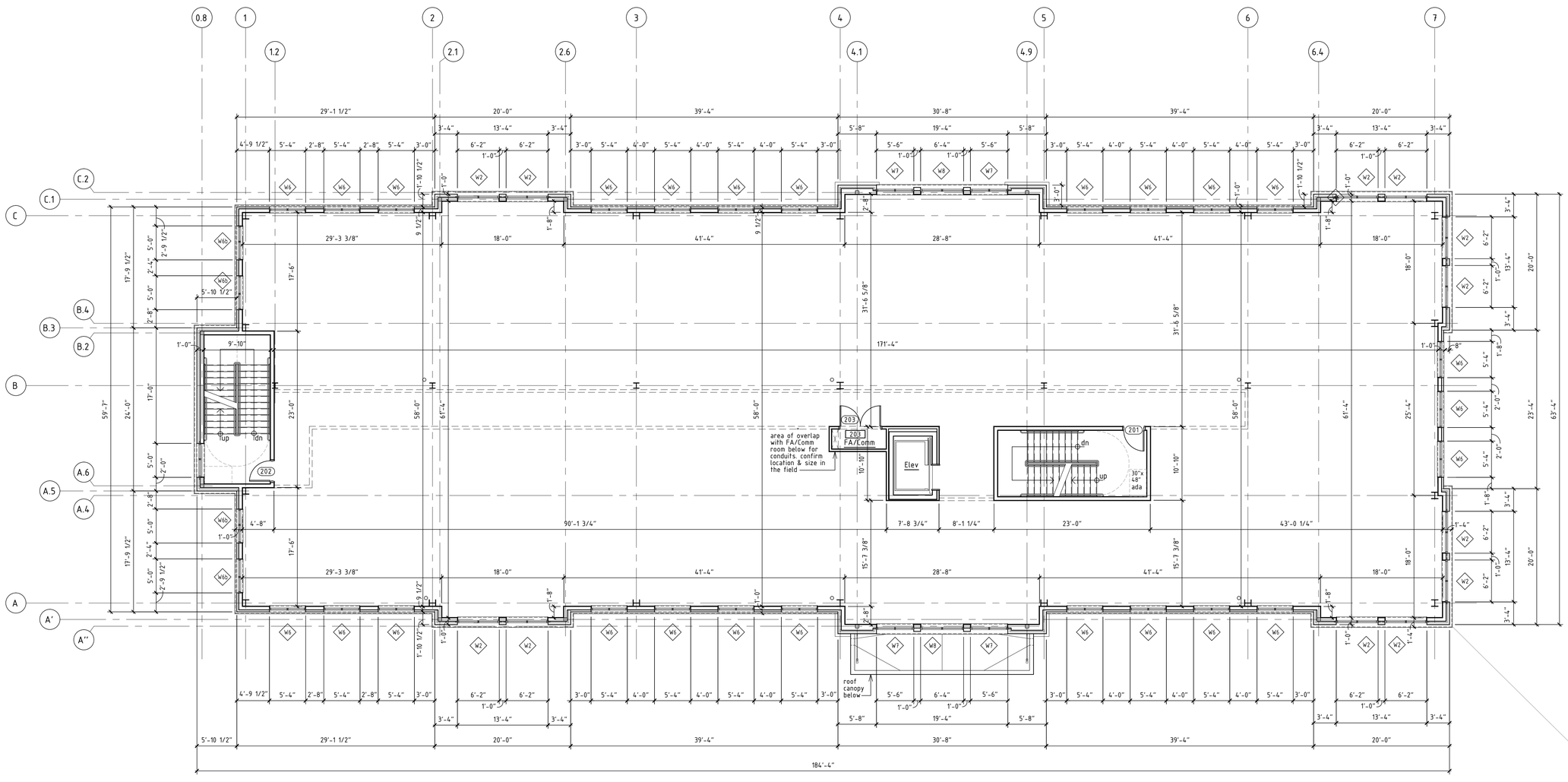

1 A1.2 Second Floor Plan
1/8" = 1'-0"

New Shell Building
Heritage Park West
3125 Rogers Road
Wake Forest, North Carolina

MAURER ARCHITECTURE, PA
Registered Architectural Corporation
51562
North Carolina
RALEIGH, N.C.

PRELIMINARY NOT FOR CONSTRUCTION
DAVID SCOTT MAURER
REGISTERED ARCHITECT
5131
NORTH CAROLINA
RALEIGH, N.C.

MAURER ARCHITECTURE
115.5 EAST HARGETT STREET, SUITE 300
RALEIGH, NORTH CAROLINA 27601
TEL. 919-829-4969 FAX. 919-829-0860

DATE	11.22.16
DR.	mm
CH.	mm
PROJ. #	16096
REVISIONS	DATE

Second Floor Plan

A1.2

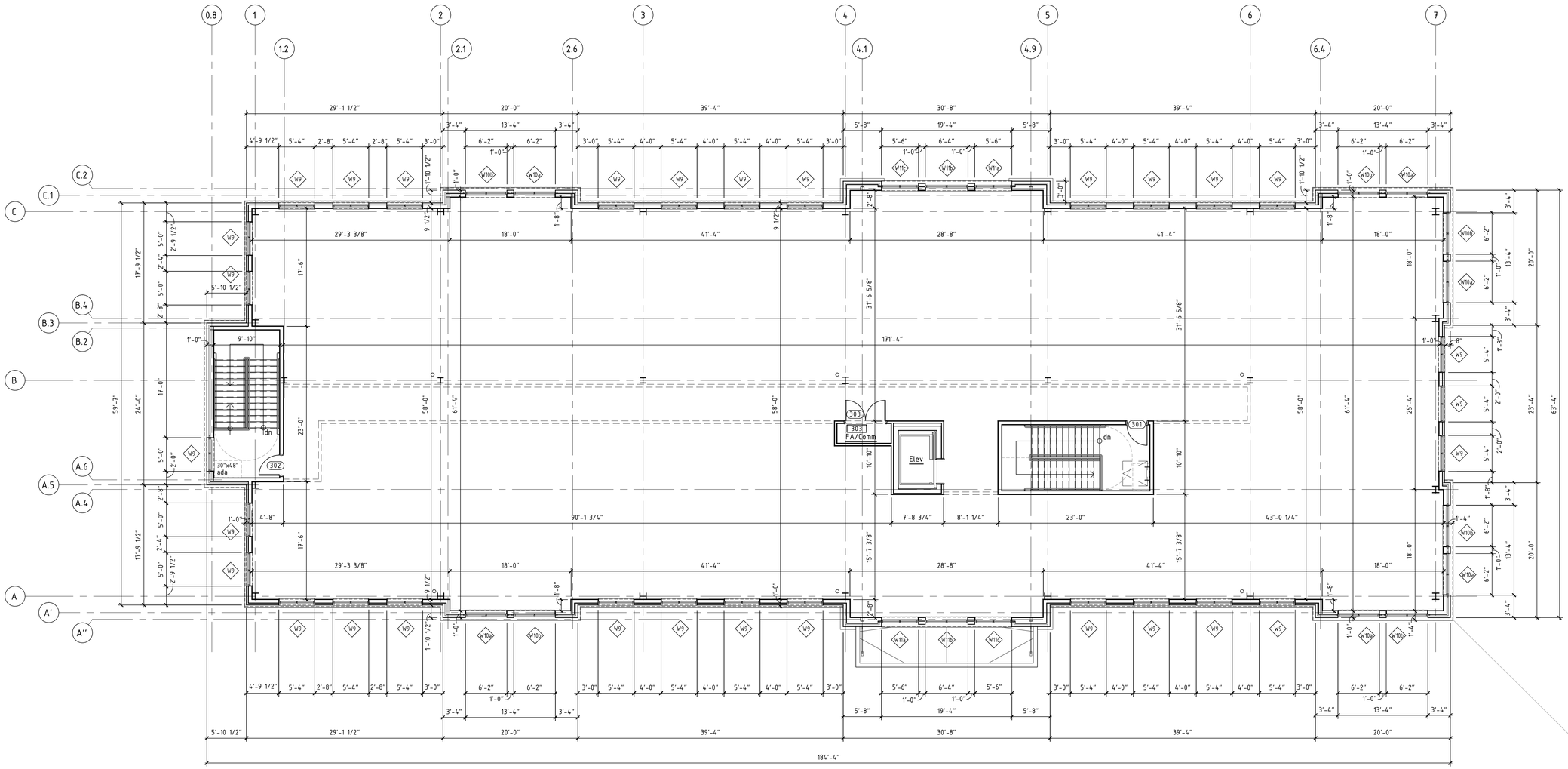

1 Third Floor Plan
A1.3 1/8" = 1'-0"

New Shell Building
Heritage Park West
3125 Rogers Road
Wake Forest, North Carolina

MAURER ARCHITECTURE, PA
Registered Architectural Corporation
51562
North Carolina
RALEIGH, NC

DAVID SCOTT MAURER
REGISTERED ARCHITECT
5131
NORTH CAROLINA
RALEIGH, NC

MAURER ARCHITECTURE
115.5 EAST HARGETT STREET, SUITE 300
RALEIGH, NORTH CAROLINA 27601
TEL. 919-829-4969 FAX. 919-829-0860

DATE	11.22.16
DR.	mm
CH.	mm
PROJ. #	16096
REVISIONS	DATE

Third Floor Plan

A1.3

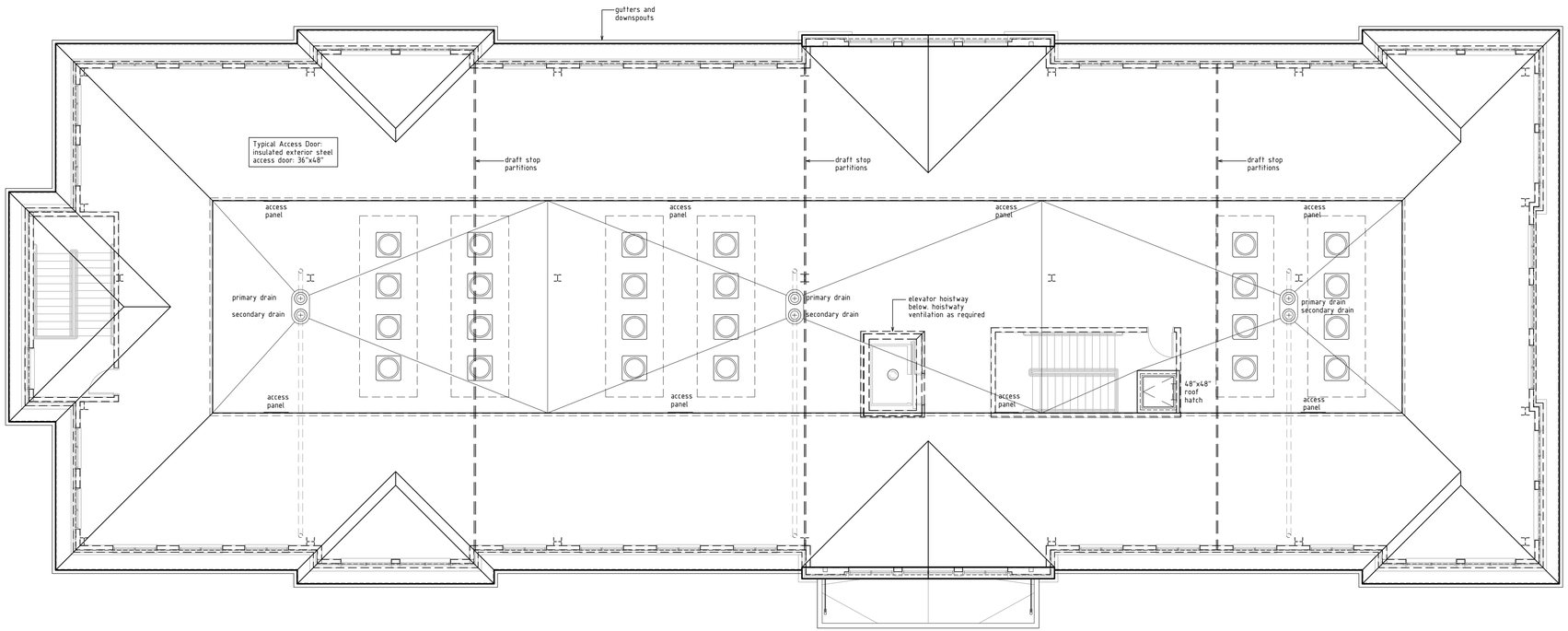

1 A1.4 Roof Plan
1/8" = 1'-0"

New Shell Building
Heritage Park West
3125 Rogers Road
Wake Forest, North Carolina

MAURER ARCHITECTURE, PA
Registered Architectural Corporation
51562
North Carolina
RALEIGH, NC

PRELIMINARY SET FOR CONSTRUCTION

DAVID SCOTT MAURER
REGISTERED ARCHITECT
5131
NORTH CAROLINA
RALEIGH, NC

MAURER ARCHITECTURE
115.5 EAST HARGETT STREET, SUITE 300
RALEIGH, NORTH CAROLINA 27601
TEL. 919-829-4969 FAX. 919-829-0860

DATE	11.22.16
DR.	mm
CH.	mm
PROJ. #	16096
REVISIONS	DATE

Roof Plan

A1.4

2 A2.1 Side Elevation - West
1/8" = 1'-0"

1 A2.1 Front Elevation - North
1/8" = 1'-0"

New Shell Building
Heritage Park West
3125 Rogers Road
Wake Forest, North Carolina

MAURER ARCHITECTURE, PA
Registered Architectural Corporation
51562
North Carolina
RALEIGH, N.C.

DAVID SCOTT MAURER
REGISTERED ARCHITECT
5131
NORTH CAROLINA
RALEIGH, N.C.

PRELIMINARY NOT FOR CONSTRUCTION

MAURER ARCHITECTURE
115.5 EAST HARGETT STREET, SUITE 300
RALEIGH, NORTH CAROLINA 27601
TEL. 919-829-4969 FAX. 919-829-0860

DATE	11.22.16
DR.	mm
CH.	mm
PROJ. #	16096
REVISIONS	DATE

Exterior Elevations

A2.1

2 A2.2 Rear Elevation - South
1/8" = 1'-0"

similar

1 A2.2 Side Elevation - East
1/8" = 1'-0"

New Shell Building
Heritage Park West
3125 Rogers Road
Wake Forest, North Carolina

MAURER ARCHITECTURE
115.5 EAST HARGETT STREET, SUITE 300
RALEIGH, NORTH CAROLINA 27601
TEL. 919-829-4969 FAX. 919-829-0860

DATE	11.22.16
DR.	mm
CH.	mm
PROJ. #	16096
REVISIONS	DATE

Exterior Elevations

A2.2

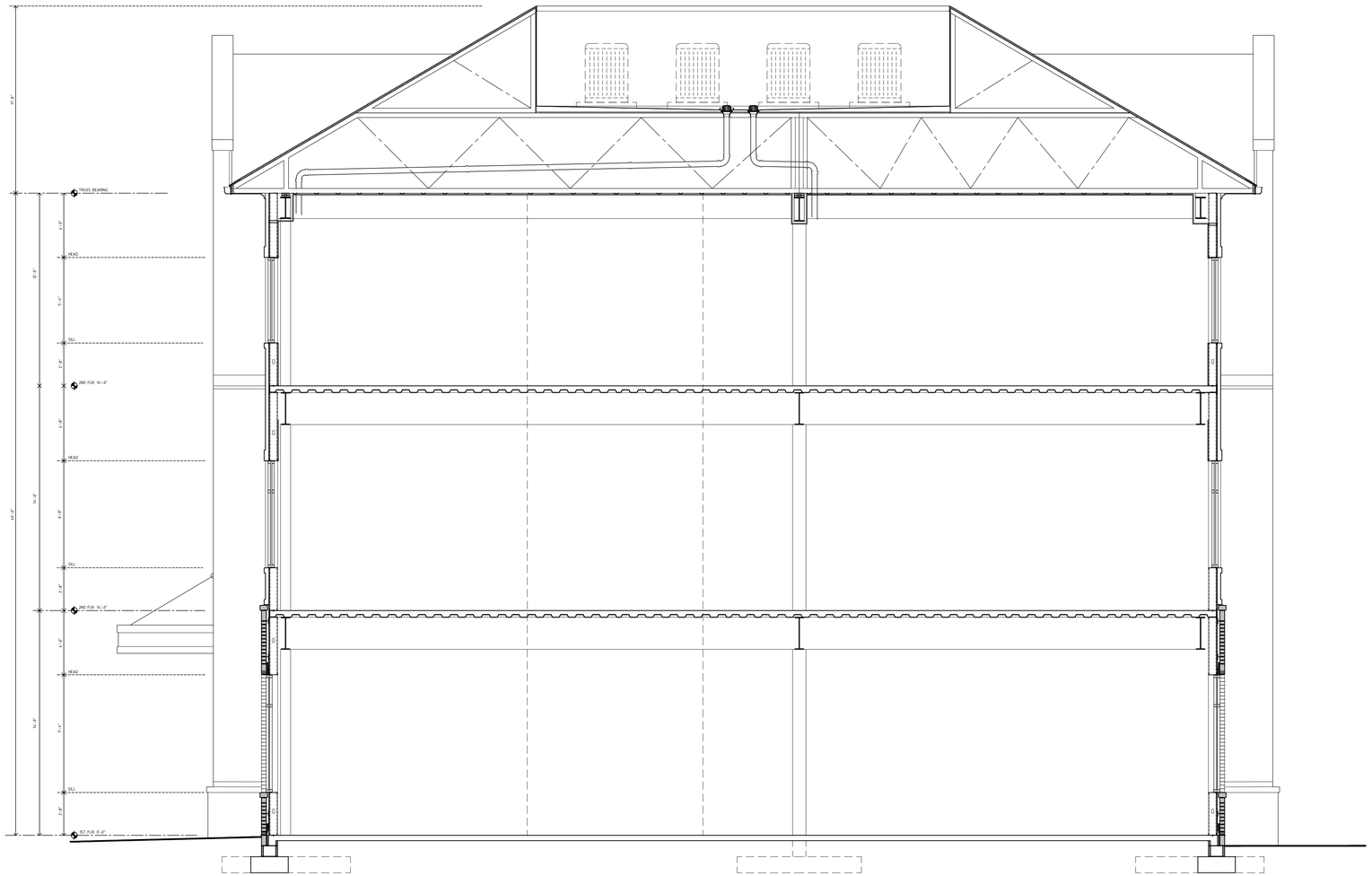

1 / A3.1 Building Section
1/4" = 1'-0"

New Shell Building
Heritage Park West
3125 Rogers Road
Wake Forest, North Carolina

MAURER ARCHITECTURE, PA
Registered Architectural Corporation
51562
North Carolina
RALEIGH, NC

PRELIMINARY NOT FOR CONSTRUCTION
DAVID SCOTT MAURER
REGISTERED ARCHITECT
5131
NORTH CAROLINA
RALEIGH, NC

MAURER ARCHITECTURE
115.5 EAST HARGETT STREET, SUITE 300
RALEIGH, NORTH CAROLINA 27601
TEL. 919-829-4969 FAX. 919-829-0860

DATE	11.22.16
DR.	mm
CH.	mm
PROJ. #	16096
REVISIONS	DATE

Building Section

A3.1

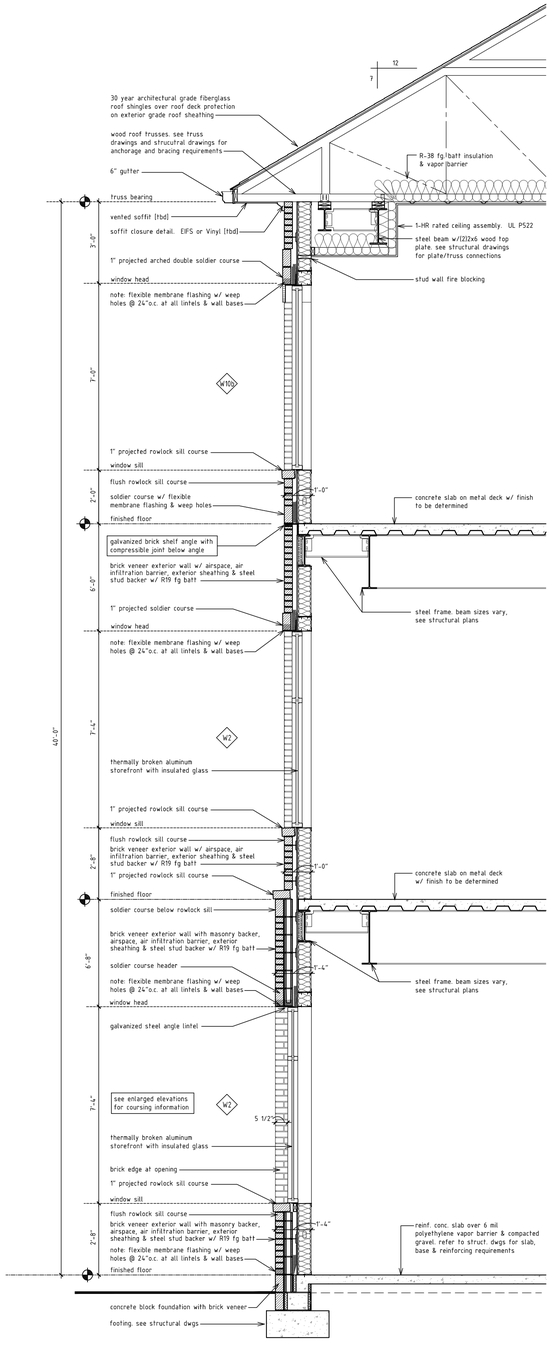

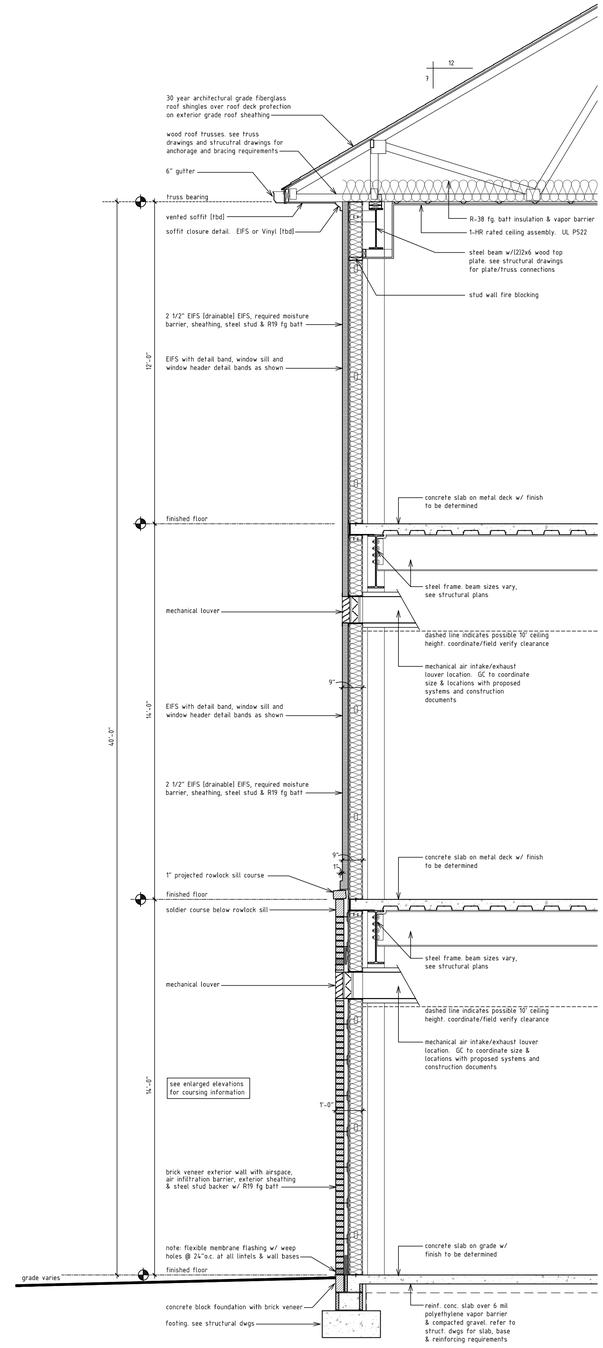

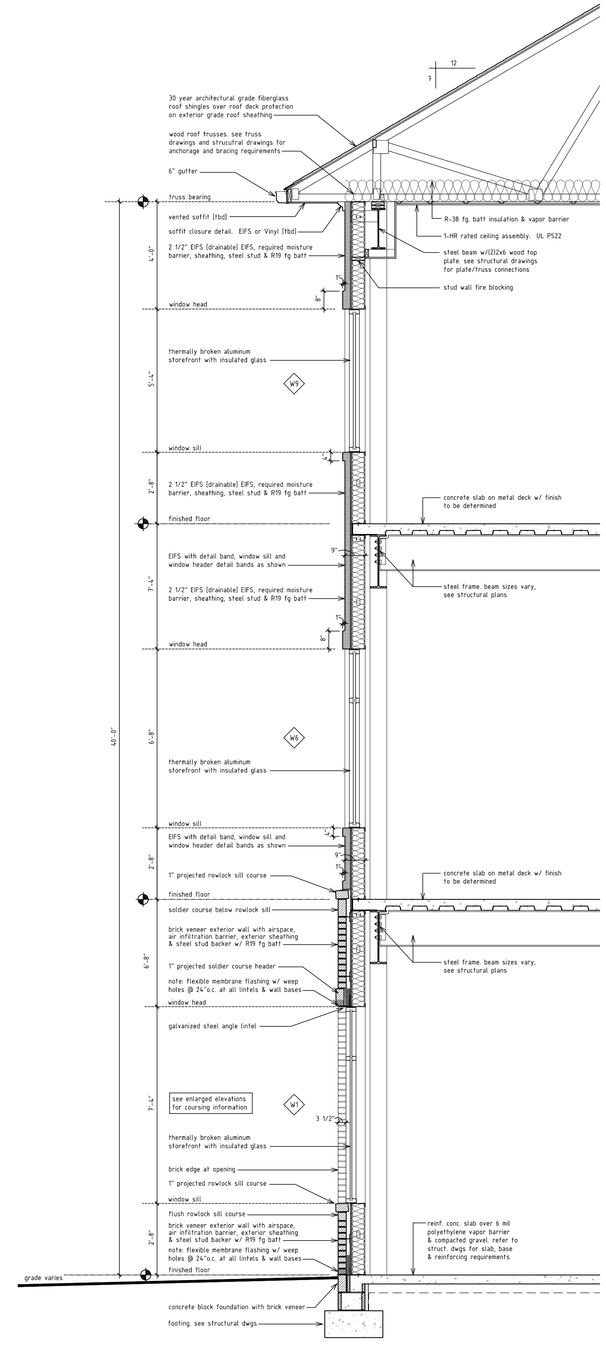

New Shell Building

Heritage Park West

3125 Rogers Road
Wake Forest, North Carolina

MAURER ARCHITECTURE, P.A.
Registered Architectural Corporation
51562
North Carolina
RALEIGH, N.C.

PRELIMINARY NOT FOR CONSTRUCTION
DAVID SCOTT MAURER
REGISTERED ARCHITECT
5131
NORTH CAROLINA
RALEIGH, N.C.

MAURER ARCHITECTURE
115.5 EAST HARGETT STREET, SUITE 300
RALEIGH, NORTH CAROLINA 27601
TEL. 919-829-4969 FAX. 919-829-0860

DATE	11.22.16
DR.	mm
CH.	mm
PROJ. #	16096
REVISIONS	DATE

Wall Sections

A3.3

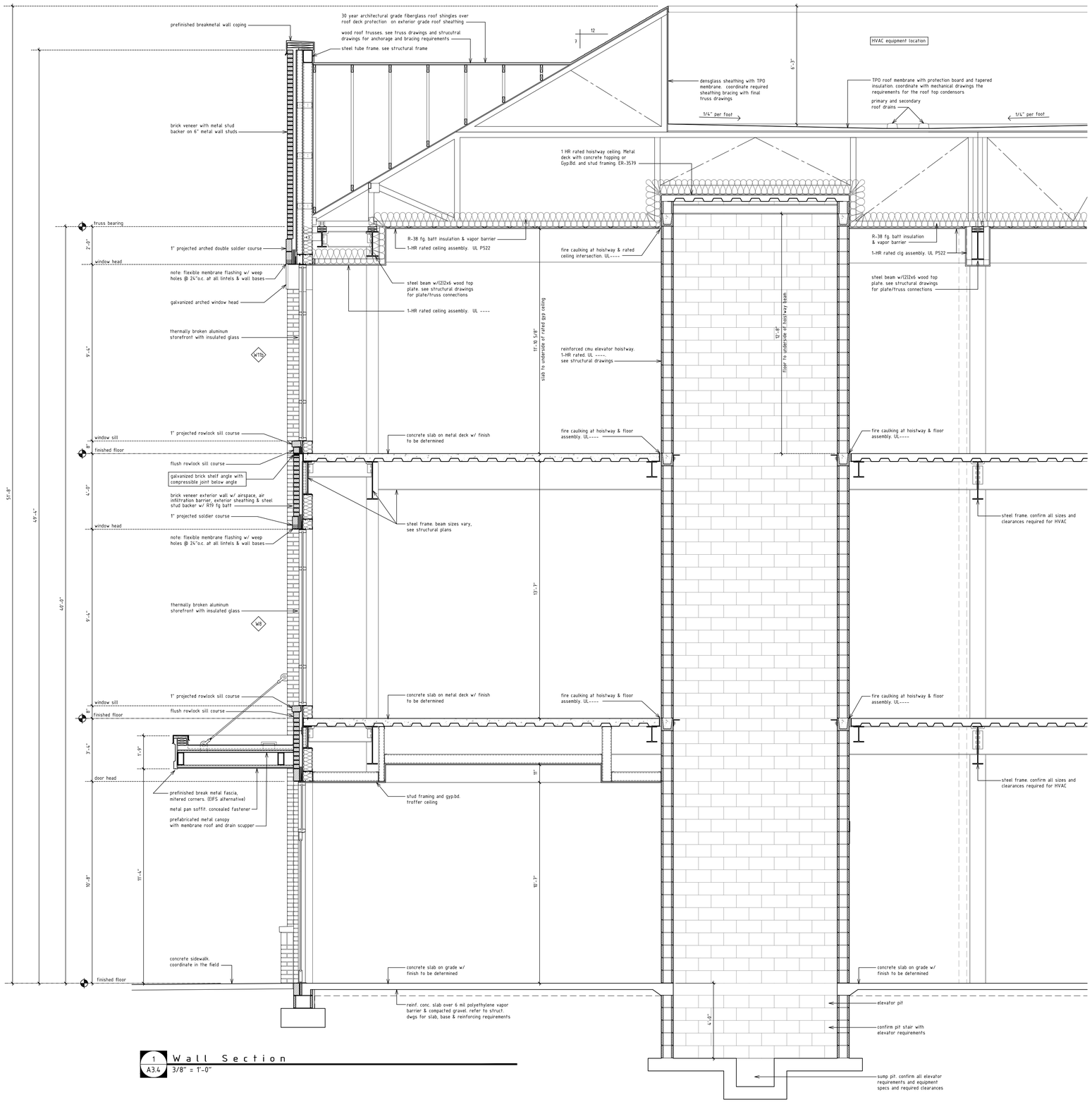

1 A3.4 **Wall Section**
3/8" = 1'-0"

New Shell Building
Heritage Park West
3125 Rogers Road
Wake Forest, North Carolina

MAURER ARCHITECTURE, P.A. Registered Architectural Corporation 51562 North Carolina RALEIGH, N.C.

PRELIMINARY SET FOR REVIEW & CONSTRUCTION
DAVID SCOTT MAURER REGISTERED ARCHITECT 5131 NORTH CAROLINA RALEIGH, N.C.

MAURER ARCHITECTURE
115.5 EAST HARGETT STREET, SUITE 300
RALEIGH, NORTH CAROLINA 27601
TEL. 919-829-4969 FAX. 919-829-0860

DATE	11.22.16
DR.	mm
CH.	mm
PROJ. #	16096
REVISIONS	DATE

Wall Sections

A3.4

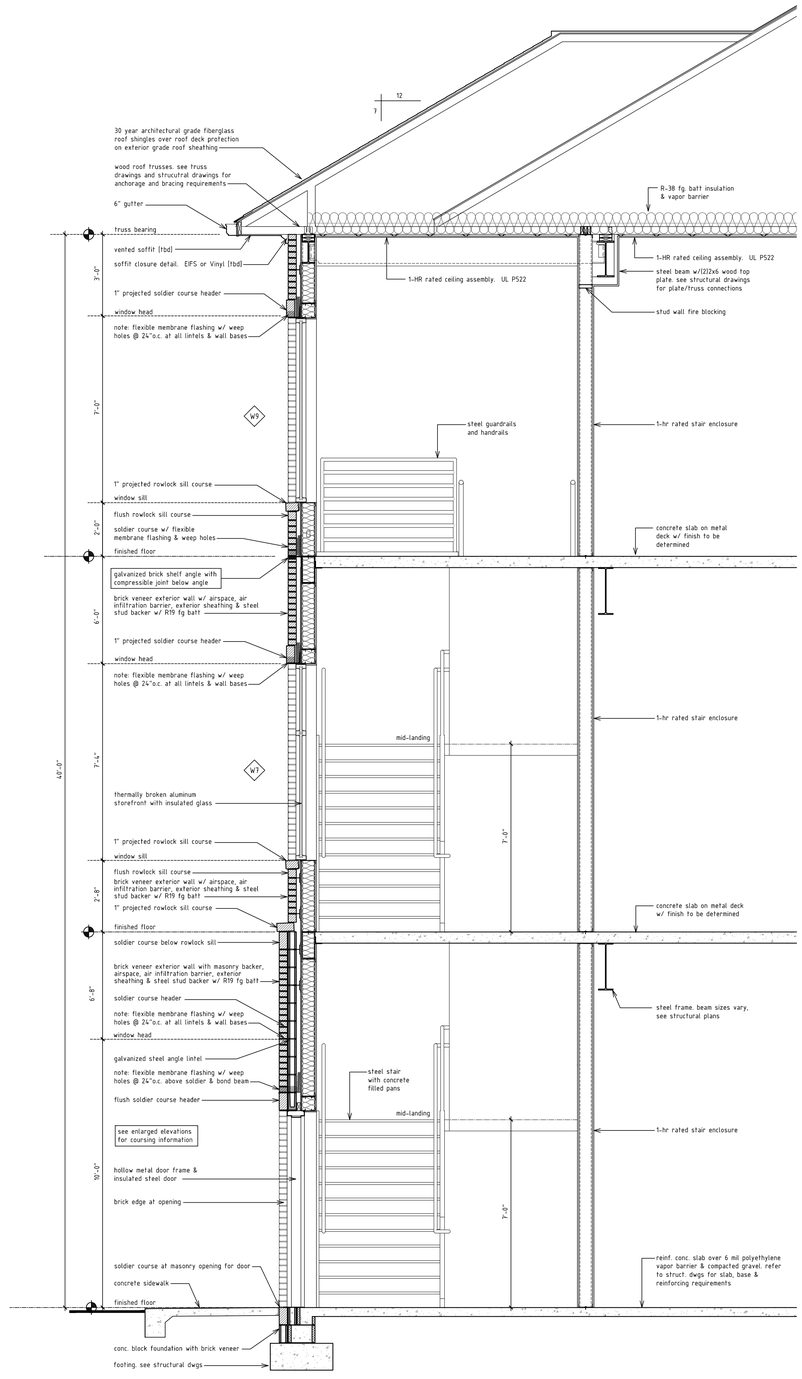

1 / A3.5 **Wall Section**
3/8" = 1'-0"

New Shell Building
Heritage Park West
3125 Rogers Road
Wake Forest, North Carolina

MAURER ARCHITECTURE
115.5 EAST HARGETT STREET, SUITE 300
RALEIGH, NORTH CAROLINA 27601
TEL. 919-829-4969 FAX. 919-829-0860

DATE	11.22.16
DR.	mm
CH.	mm
PROJ. #	16096
REVISIONS	DATE

Wall Sections

A3.5

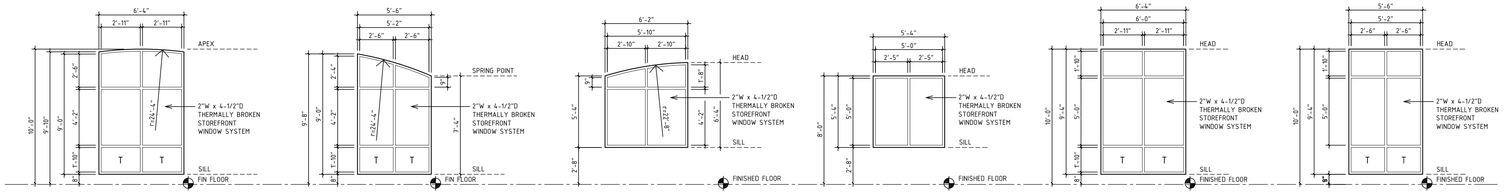

W11B WINDOW TYPE
ASSEMBLY VALUE:
U FACTOR = 0.43
SHGC = 0.22
VT = 0.30

W11C WINDOW TYPE
ASSEMBLY VALUE:
U FACTOR = 0.43
SHGC = 0.22
VT = 0.30

W11A WINDOW TYPE
SIMILAR - MIRRORED

W10A WINDOW TYPE
ASSEMBLY VALUE:
U FACTOR = 0.43
SHGC = 0.22
VT = 0.30

W10B WINDOW TYPE
SIMILAR - MIRRORED

W9 WINDOW TYPE
ASSEMBLY VALUE:
U FACTOR = 0.43
SHGC = 0.22
VT = 0.30

W8 WINDOW TYPE
ASSEMBLY VALUE:
U FACTOR = 0.43
SHGC = 0.22
VT = 0.30

W7 WINDOW TYPE
ASSEMBLY VALUE:
U FACTOR = 0.43
SHGC = 0.22
VT = 0.30

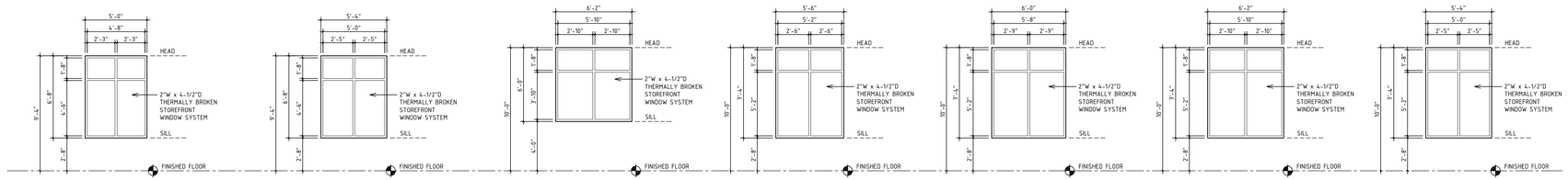

W6b WINDOW TYPE
ASSEMBLY VALUE:
U FACTOR = 0.43
SHGC = 0.22
VT = 0.30

W6 WINDOW TYPE
ASSEMBLY VALUE:
U FACTOR = 0.43
SHGC = 0.22
VT = 0.30

W5 WINDOW TYPE
ASSEMBLY VALUE:
U FACTOR = 0.43
SHGC = 0.22
VT = 0.30

W4 WINDOW TYPE
ASSEMBLY VALUE:
U FACTOR = 0.43
SHGC = 0.22
VT = 0.30

W3 WINDOW TYPE
ASSEMBLY VALUE:
U FACTOR = 0.43
SHGC = 0.22
VT = 0.30

W2 WINDOW TYPE
ASSEMBLY VALUE:
U FACTOR = 0.43
SHGC = 0.22
VT = 0.30

W1 WINDOW TYPE
ASSEMBLY VALUE:
U FACTOR = 0.43
SHGC = 0.22
VT = 0.30

WINDOW NOTES

STOREFRONT FRAMES AND GLASS:
-YKK: YES 45 TU (1" IGU) CLEAR ANODIZED FRAME
-SOLARBAN 70XL GLASS, OR ALTERNATE.

New Shell Building
Heritage Park West
3125 Rogers Road
Wake Forest, North Carolina

MAURER ARCHITECTURE, P.A.
Registered Architectural Corporation
51562
North Carolina
RALEIGH, N.C.

PRELIMINARY NOT FOR CONSTRUCTION
DAVID SCOTT MAURER
REGISTERED ARCHITECT
5131
NORTH CAROLINA
RALEIGH, N.C.

MAURER ARCHITECTURE
115.5 EAST HARGETT STREET, SUITE 300
RALEIGH, NORTH CAROLINA 27601
TEL. 919-829-4969 FAX. 919-829-0860

DATE	11.22.16
DR.	mm
CH.	mm
PROJ. #	16096
REVISIONS	DATE

Window & Door Schedules

A4.1

GENERAL STRUCTURAL NOTES

THESE DRAWINGS, AS INSTRUMENTS OF PROFESSIONAL SERVICE, ARE THE PROPERTY OF LYSAGHT & ASSOCIATES, P.A., FOR USE SOLELY WITH THIS PROJECT AND SHALL NOT BE REPRODUCED FOR OTHER PURPOSES.

THE PROFESSIONAL ENGINEER WHOSE SEAL APPEARS ON THESE DRAWINGS IS THE PROJECT STRUCTURAL ENGINEER-OF-RECORD (SER) WHO BEARS LEGAL RESPONSIBILITY FOR THE PERFORMANCE OF THE STRUCTURAL FRAMING RELATING TO PUBLIC HEALTH, SAFETY, AND WELFARE. NO OTHER PARTY, WHETHER OR NOT A PROFESSIONAL ENGINEER, MAY COMPLETE, CORRECT, REVISE, DELETE, OR ADD TO THESE CONSTRUCTION DOCUMENTS OR PERFORM INSPECTIONS OF THE WORK WITHOUT THE WRITTEN PERMISSION OF THE SER.

USE STRUCTURAL DRAWINGS IN CONJUNCTION WITH JOB SPECIFICATIONS, AND OTHER DRAWINGS.

SECTIONS AND DETAILS SHOWN SHALL BE CONSIDERED TYPICAL FOR ALL SIMILAR CONDITIONS.

ALL NON-STRUCTURAL ELEMENTS INDICATED ON THE STRUCTURAL DRAWINGS HAVE BEEN SHOWN IN GENERAL RELATIONSHIP TO THE STRUCTURAL ELEMENTS. THEY SHALL NOT BE ASSUMED TO BE ACCURATE AND REFERENCE MUST BE MADE TO THE APPROPRIATE CONSULTANT(S) PLANS AND SPECIFICATIONS.

CONTRACTOR SHALL VERIFY ALL CONDITIONS IN THE FIELD AND TAKE ALL NECESSARY FIELD MEASUREMENTS.

THE STRUCTURE SHOWN ON THESE DRAWINGS IS STRUCTURALLY SOUND ONLY IN ITS COMPLETED FORM. THE CONTRACTOR SHALL PROVIDE ALL NECESSARY BRACING TO STABILIZE THE BUILDING DURING CONSTRUCTION.

SCOPE OF STRUCTURAL ENGINEERING SERVICES

LYSAGHT & ASSOCIATES, P.A. HAS PERFORMED THE STRUCTURAL DESIGN AND PREPARED THE STRUCTURAL WORKING DRAWINGS FOR THIS PROJECT. "CONSTRUCTION REVIEW" SERVICES ARE NOT A PART OF THIS CONTRACT. THE CONSTRUCTION MUST BE PERFORMED IN STRICT ACCORDANCE WITH THE STRUCTURAL DRAWINGS. ANY DEVIATION FROM THE DRAWINGS MUST BE APPROVED IN WRITING BY THE STRUCTURAL ENGINEER. ERRORS AND/OR OMISSIONS FOUND ON THE STRUCTURAL DRAWINGS MUST BE BROUGHT TO THE STRUCTURAL ENGINEER'S ATTENTION IMMEDIATELY.

PORTIONS OF THE STRUCTURAL DESIGN (AS NOTED ON THE DRAWINGS AND IN THESE NOTES) ARE THE RESPONSIBILITY OF THE MATERIAL SUPPLIERS. SHOP DRAWINGS FOR EACH OF THE STRUCTURAL COMPONENTS MUST BE SUBMITTED TO THE STRUCTURAL ENGINEER FOR REVIEW PRIOR TO FABRICATION AND ERECTION.

THE STRUCTURAL ENGINEER IS RESPONSIBLE FOR THE DESIGN OF THE PRIMARY STRUCTURAL SYSTEM, EXCEPT FOR THE COMPONENTS NOTED ABOVE. RESPONSIBILITY FOR ANY SECONDARY STRUCTURAL AND NON-STRUCTURAL SYSTEMS NOT SHOWN ON THE STRUCTURAL PLANS RESTS WITH SOMEONE OTHER THAN THE STRUCTURAL ENGINEER.

FLAT ROOFS MUST HAVE CONTROLLED DRAINAGE PROVISIONS AND SHALL BE EQUIPPED WITH A SECONDARY DRAINAGE SYSTEM AT A HIGHER ELEVATION WHICH PREVENTS PONDING ON THE ROOF ABOVE THAT ELEVATION. THE SECONDARY DRAINAGE MUST BE SET SO THAT A 4" MAXIMUM DEPTH OF WATER WILL POND ON THE ROOF DURING THE DESIGN RAINSTORM. THE DESIGN OF THE ROOF DRAINAGE, SECONDARY DRAINAGE AND/OR OVERFLOW SCUPPERS IS BEYOND THE SCOPE OF THE STRUCTURAL ENGINEER'S SERVICES.

THE STRUCTURAL ENGINEER HAS NOT DESIGNED THE STRUCTURE FOR SPECIFIC VIBRATION LIMITS. VIBRATION LIMITATIONS ARE BASED ON STANDARD ENGINEERING PRACTICES AND PAST EXPERIENCE WITH SIMILAR CONSTRUCTION.

THE STRUCTURAL ENGINEER IS NOT RESPONSIBLE FOR, AND WILL NOT HAVE CONTROL OF, CONSTRUCTION MEANS, METHODS, TECHNIQUES, SEQUENCES OR PROCEDURES, OR FOR SAFETY PRECAUTIONS AND PROGRAMS IN CONNECTION WITH THE CONSTRUCTION WORK; NOR WILL HE BE RESPONSIBLE FOR THE CONTRACTOR'S FAILURE TO CARRY OUT THE CONSTRUCTION WORK IN ACCORDANCE WITH THE CONTRACT DOCUMENTS.

FIELD MEASUREMENTS AND THE VERIFICATION OF FIELD DIMENSIONS ARE NOT PART OF THE STRUCTURAL ENGINEER'S RESPONSIBILITY. THE CONTRACTOR MUST CHECK ALL (ASSUMED) EXISTING CONDITIONS SHOWN ON THESE DRAWINGS FOR ACCURACY AND NOTIFY THE STRUCTURAL ENGINEER OF ANY DISCREPANCIES.

ABBREVIATIONS

A.B.	ANCHOR BOLT
A.F.F.	ABOVE FINISH FLOOR
C.J.	CONTROL OR CONSTRUCTION JOINT IN SLAB
D.J.	DOUBLE JOIST
E.J.	EXPANSION JOINT
E.O.S.	EDGE OF SLAB
E.W.	EACH WAY
MCJ	MASONRY CONTROL JOINT
N.T.S.	NOT TO SCALE
O.C.	ON CENTER
P.A.F.	POWDER ACTUATED FASTENER
P.T.	PRESSURE TREATED
S-P-F	SPRUCE PINE FIR LUMBER
SYP	SOUTHERN YELLOW PINE LUMBER
T.B.E.	TRUSS BEARING ELEVATION
T.O.F.	TOP OF FOOTING
T.O.M.	TOP OF MASONRY
T.O.S.	TOP OF STEEL
T.O.J.	TOP OF JOIST
U.N.O.	UNLESS NOTED OTHERWISE
W.W.F.	WELDED WIRE FABRIC

CODE

NORTH CAROLINA STATE BUILDING CODE – 2012 EDITION

BUILDING OCCUPANCY CATEGORY II

DESIGN LOADS

ROOF DEAD LOAD	20 PSF
ROOF LIVE LOAD (PITCHED ROOF AREAS)	20 PSF
ROOF LIVE LOAD (FLAT ROOF HVAC AREA)	35 PSF
FLOOR DEAD LOAD	60 PSF
FLOOR LIVE LOAD (Uniform)	100 PSF
FLOOR LIVE LOAD (Concentrated)	2000 LBS
SNOW LOAD DATA :	
GROUND SNOW LOAD	15 PSF
SNOW EXPOSURE FACTOR	1.0
SNOW LOAD IMPORTANCE FACTOR	1.0
THERMAL FACTOR	1.1
FLAT ROOF SNOW LOAD (WITH RAIN ON SNOW)	15.5 PSF
ROOF SLOPE FACTOR	1.0
PITCHED ROOF SNOW LOAD	10.5 PSF
WIND LOAD DATA :	
DESIGN WIND SPEED (ASCE 7-05)	95 MPH
BUILDING OCCUPANCY CATEGORY	II
WIND EXPOSURE	B w/ Open Patches
INTERNAL PRESSURE COEFFICIENTS	+0.18, -0.18
WIND IMPORTANCE FACTOR	1.0
WIND BASE SHEAR (x-x DIRECTION)	57.7 KIPS
WIND BASE SHEAR (y-y DIRECTION)	171.3 KIPS
WIND PRESSURE FOR COMPONENTS / CLADDING	PER ASCE 7-05
SEISMIC LOAD DATA :	
MAPPED SPECTRAL RESPONSE ACCELERA Ss	0.189
MAPPED SPECTRAL RESPONSE ACCELERA S1	0.075
SPECTRAL RESPONSE COEFFICIENT SDS	0.202
SPECTRAL RESPONSE COEFFICIENT SD1	0.120
SITE CLASS	D
SEISMIC DESIGN CATEGORY	C
BASIC STRUCTURAL SYSTEM	Structural Steel System
SEISMIC RESISTING SYSTEM	SSS Not Detailed for Seismic Resistance
RESPONSE MODIFICATION COEFFICIENT R	3.00
SYSTEM OVERSTRENGTH FACTOR Omega	3.00
DEFLECTION AMPLIFICATION FACTOR Cd	3.00
SEISMIC RESPONSE COEFFICIENT Cs	0.045
ANALYSIS PROCEDURE	Equivalent Lateral Force
SEISMIC BASE SHEAR	108.6 KIPS
LATERAL DESIGN CONTROL	x-x SEISMIC y-y WIND

FOUNDATIONS

ALL FOOTINGS SHALL REST ON SOIL CAPABLE OF SAFELY SUPPORTING 3000 PSF. CONTACT STRUCTURAL ENGINEER IF UNSATISFACTORY SUBSURFACE CONDITIONS ARE ENCOUNTERED.

FOOTINGS SHALL BE CARRIED TO A LOWER ELEVATION THAN THOSE INDICATED ON THESE DRAWINGS IF NECESSARY TO REACH FIRM UNDISTURBED SOIL.

THE BOTTOM OF ALL EXTERIOR FOOTINGS SHALL BE A MINIMUM OF 16" BELOW FINISHED GRADE UNLESS NOTED OTHERWISE.

SLAB ON GRADE SHALL BE FOUNDED ON STABLE NATURAL SOIL OR CONTROLLED COMPACTED FILL. THE MINIMUM BEARING CAPACITY SHALL BE 3000 PSF.

ALL FILL SHALL BE PLACED IN 8" MAXIMUM LOOSE LIFTS AND SHALL BE COMPACTED TO A MINIMUM OF 95 PERCENT MAXIMUM DRY DENSITY AS DETERMINED IN ACCORDANCE WITH ASTM D-698 (STANDARD PROCTOR METHOD). THIS REQUIREMENT SHALL BE INCREASED TO 98 PERCENT OF ASTM D-698 IN THE FINAL FOOT BENEATH FOOTINGS, FLOOR SLABS, AND PAVEMENTS.

WALLS ACTING AS RETAINING WALLS SHALL NOT BE BACKFILLED WITHOUT BRACING UNTIL ALL SUPPORTING SOIL AND SLABS ARE IN PLACE.

DO NOT OPERATE HEAVY EQUIPMENT ANY CLOSER TO A RETAINING WALL THAN THE DISTANCE EQUAL TO THE HEIGHT OF THE FILL.

REFER TO D. MILLER & ASSOCIATES, PA SUBSURFACE EXPLORATION REPORT _____ DATED _____, FOR ADDITIONAL SUBSURFACE INFORMATION AND RECOMMENDATIONS.

CONCRETE

CONCRETE SHALL BE PROPORTIONED, MIXED AND PLACED IN ACCORDANCE WITH ACI 318, "BUILDING CODE REQUIREMENTS FOR REINFORCED CONCRETE", AND ACI 301, SPECIFICATIONS FOR STRUCTURAL CONCRETE FOR BUILDINGS". ANY ADMIXTURES MUST BE APPROVED BY THE STRUCTURAL ENGINEER.

ADMIXTURES CONTAINING CHLORIDE SALTS ARE NOT PERMITTED.

MINIMUM 28 DAY COMPRESSIVE STRENGTH OF CONCRETE SHALL BE 3000 PSI. USE NORMAL WEIGHT CONCRETE FOR FOOTINGS AND SLABS ON GRADE.

CONCRETE AT SECOND FLOOR SLAB DENOTED AS LIGHTWEIGHT CONCRETE SHALL HAVE AN EQUILIBRIUM UNIT WEIGHT OF 110 PCF (±3PCF). THE MAXIMUM FRESH DENSITY SHALL BE 116 PCF. ALL OTHER CONCRETE NOT SPECIFICALLY NOTED AS LIGHTWEIGHT CONCRETE SHALL BE NORMAL WEIGHT CONCRETE WITH A UNIT WEIGHT OF 145 PCF (±5 PCF).

CONCRETE EXPOSED TO EXTERIOR CONDITIONS SHALL BE AIR-ENTRAINED WITH A TOTAL AIR CONTENT OF 6 PERCENT (+/- 1.5%).

DO NOT CAST CONCRETE IN WATER OR ON FROZEN GROUND. FOR SLABS ON GRADE, LIGHTLY DAMPEN THE SUBGRADE BEFORE PLACING CONCRETE TO PREVENT THE SUBGRADE FROM ABSORBING WATER FROM THE CONCRETE MIX. APPLY WATER AT NEARLY THE SAME RATE IT SOAKS INTO THE SUBGRADE SURFACE.

CRACK CONTROL JOINTS SHALL BE PLACED IN SLABS ON GRADE IN SQUARE PATTERNS AT A MAXIMUM SPACING OF 20' UNLESS NOTED OTHERWISE. PLACE CONTROL JOINTS TO AVOID REENTRANT CORNERS. MAKE SAWCUTS TO FORM WEAKENED PLANE CONTROL JOINTS AS SOON AFTER CONCRETE PLACEMENT AS POSSIBLE.

START CURING FOR SLABS ON GRADE AS SOON AS THE FINISHERS ARE DONE. APPLY THE CURING COMPOUND IN TWO COATS AT RIGHT ANGLES TO EACH OTHER AND NOT MORE THAN 300 SQUARE FEET PER GALLON, ABOUT 15 MINUTES APART. DURING HOT WEATHER, USE A FOG SPRAY TO KEEP THE SURFACE DAMP BEFORE APPLYING A CURING COMPOUND.

REINFORCING STEEL

ALL DETAILING, FABRICATION AND PLACING OF REINFORCING STEEL SHALL BE IN ACCORDANCE WITH THE LATEST "MANUAL OF STANDARD PRACTICE FOR DETAILING REINFORCED CONCRETE STRUCTURES", ACI 315.

REINFORCING BARS SHALL BE NEW BILLET STEEL CONFORMING TO ASTM A615, GRADE 60. CLEAR CONCRETE COVER OVER BARS SHALL BE 3" FOR FOOTINGS.

ALL SLABS ON GRADE SHALL BE REINFORCED WITH 6 x 6 – W1.4 x W1.4 W.W.F. SUPPORT THE MESH AS REQUIRED TO INSURE THAT IT WILL BE LOCATED IN THE UPPER THIRD OF THE SLAB THICKNESS. PROVIDE W.W.F. IN FLAT SHEETS, NOT ROLLS.

ELEVATED SLABS ON METAL DECK SHALL BE REINFORCED WITH 6 x 6 – W1.4 x W1.4 W.W.F. PROVIDE W.W.F. IN FLAT SHEETS, NOT ROLLS.

PROVIDE CORNER BARS AT ALL FOOTING STEPS AND CORNERS. BARS SHALL BE A MINIMUM OF 2'-6" LONG AND SHALL HAVE THE SAME SIZE AND SPACING AS HORIZONTAL REINFORCING.

LAP ALL SPLICES IN CAST-IN-PLACE CONCRETE AS SPECIFICALLY CALLED FOR, BUT AT LEAST 48 BAR DIAMETERS. LAP ALL SPLICES IN MASONRY 48 BAR DIAMETERS MINIMUM, UNLESS NOTED OTHERWISE.

SUBMIT SHOP DRAWINGS TO THE STRUCTURAL ENGINEER FOR REVIEW PRIOR TO FABRICATION.

BRICK MASONRY

BRICK VENEER SHALL BE OF A QUALITY AT LEAST EQUAL TO THAT REQUIRED BY ASTM SPECIFICATIONS (C216). THE COMPRESSIVE STRENGTH OF BRICK UNITS SHALL BE 4500 PSI MINIMUM.

MORTAR SHALL BE OF A QUALITY AT LEAST EQUAL TO THAT REQUIRED BY ASTM "STANDARD SPECIFICATIONS FOR MORTAR FOR UNIT MASONRY" (C270). USE TYPE "M" OR "S" MORTAR BELOW GRADE. TYPE "N" MORTAR IS PERMITTED ABOVE GRADE.

JOINT REINFORCEMENT FOR COMPOSITE AND CAVITY WALLS SHALL BE CORROSION RESISTANT (HOT DIP GALVANIZED AFTER FABRICATION) EQUIVALENT TO DUR-O-WALL LADDER TYPE. JOINT REINFORCEMENT SHALL BE SPACED AT 16" O.C. VERTICALLY UNLESS NOTED OTHERWISE ON THE PLANS.

MASONRY ANCHORS FOR BRICK VENEER SHALL BE CORROSION RESISTANT (HOT DIP GALVANIZED AFTER FABRICATION) AND SHALL HAVE A MAXIMUM SPACING OF 16" HORIZONTALLY AND VERTICALLY.

REFER TO THE ARCHITECTURAL PLANS FOR LOCATIONS OF BRICK EXPANSION JOINTS, OR IF NOT SHOWN, COORDINATE WITH ARCHITECT. IN GENERAL, CONTROL JOINTS SHALL BE LOCATED WITH A MAXIMUM SPACING OF 30'-0".

CONCRETE MASONRY

CONCRETE MASONRY UNITS SHALL BE ERECTED AS LOAD BEARING CONCRETE MASONRY. COMPLY WITH THE REQUIREMENTS OF ACI 530.1 / ASCE 6 / TMS 602 SPECIFICATION FOR MASONRY STRUCTURES.

CONCRETE MASONRY UNITS SHALL CONFORM TO ASTM SPECIFICATIONS FOR HOLLOW LOAD-BEARING CONCRETE MASONRY UNITS (ASTM C90, ASA A79.1). MORTAR SHALL CONFORM TO THE REQUIREMENTS OF ASTM STANDARD SPECIFICATIONS FOR MORTAR FOR UNIT MASONRY (ASTM C270), TYPE "M" OR "S". THE MINIMUM NET COMPRESSIVE STRENGTH OF MASONRY UNITS SHALL BE 2000 PSI (f'm = 1500 PSI FOR MASONRY SYSTEM).

ALL GROUT USED TO FILL REINFORCED MASONRY CAVITIES AND SHOWN AT OTHER LOCATIONS ON THE PLANS SHALL CONFORM TO ASTM C476 AND SHALL HAVE A MINIMUM 28 DAY COMPRESSIVE STRENGTH OF 3000 PSI.

PROVIDE HORIZONTAL JOINT REINFORCEMENT AT 16" O.C. IN ALL CMU WALLS UNLESS NOTED OTHERWISE ON THE DRAWINGS. USE LADDER TYPE DUR-O-WALL REINFORCEMENT, HOT DIP GALVANIZED AFTER FABRICATION. LONGITUDINAL WIRES SHALL BE A MINIMUM OF (2) NO. 9 GAGE. LOCATE JOINT REINFORCEMENT IN FIRST AND SECOND BED JOINTS, 8" APART IMMEDIATELY ABOVE LINTELS AND BELOW SILLS AT OPENINGS. REINFORCEMENT SHALL NOT EXTEND THROUGH VERTICAL MASONRY CONTROL JOINTS.

MASONRY WALLS ARE TO BE LATERALLY BRACED DURING CONSTRUCTION IN ACCORDANCE WITH "STANDARD PRACTICE FOR BRACING MASONRY WALLS UNDER CONSTRUCTION" BY THE COUNCIL FOR MASONRY WALL BRACING AND THE MASON CONTRACTORS ASSOCIATION OF AMERICA. TEMPORARY BRACING SHALL REMAIN IN PLACE UNTIL PERMANENT SUPPORTING ELEMENTS OF THE STRUCTURE ARE IN PLACE.

REFER TO THE ARCHITECTURAL PLANS FOR LOCATIONS OF MASONRY CONTROL JOINTS, OR IF NOT SHOWN, COORDINATE WITH ARCHITECT. IN GENERAL, CONTROL JOINTS SHOULD BE LOCATED WITH A MAXIMUM SPACING OF 30'-0".

STRUCTURAL STEEL

FABRICATE AND ERECT ALL STRUCTURAL STEEL IN ACCORDANCE WITH THE AMERICAN INSTITUTE OF STEEL CONSTRUCTION "SPECIFICATION FOR STRUCTURAL STEEL BUILDINGS (ANSI/AISC 360-05)".

STRUCTURAL STEEL SHALL RECEIVE ONE SHOP COAT OF RUST-INHIBITIVE PAINT. STEEL COLUMNS BELOW GRADE THAT ARE NOT ENCASED IN CONCRETE SHALL BE FIELD PAINTED WITH A WATERPROOF MASTIC COMPOUND TO PREVENT CORROSION.

THE STEEL USED SHALL HAVE THE FOLLOWING MINIMUM YIELD STRESS:

WIDE FLANGE SHAPES ('W' SHAPES)	50 KSI (A992)
CHANNELS, ANGLES, PLATES, MISC. SHAPES	36 KSI (A36)
STRUCTURAL PIPE SHAPES	35 KSI (A53, B)
HSS TUBE SHAPES	46 KSI (A500, B)

USE 3/4" DIAMETER A-325N BOLTS FOR ALL STEEL TO STEEL CONNECTIONS U.N.O. BOLTS SHALL BE TIGHTENED TO THE SNUG TIGHT CONDITION UNLESS NOTED OTHERWISE. THE SNUG TIGHT CONDITION IS DEFINED AS THE TIGHTNESS THAT EXISTS WHEN ALL PLIES IN A JOINT ARE IN FIRM CONTACT.

USE F1554 (GRADE 36) BOLTS FOR ALL ANCHOR BOLTS U.N.O. HEADED WELD STUDS SHALL BE MADE OF MATERIAL CONFORMING TO ASTM A108. USE E-70 ELECTRODES FOR ALL SHOP AND FIELD WELDING.

ALL EXPANSION ANCHORS SHALL BE INSTALLED WITH STANDARD EMBEDMENT DEPTH (4-3/4" FOR 3/4" DIA. ANCHORS, 3-1/2" FOR 1/2" DIA. ANCHORS). EXPANSION ANCHORS MUST BE LOCATED 1-3/8" MINIMUM FROM VERTICAL MORTAR JOINTS.

THE STEEL SUPPLIER SHALL DESIGN ALL STEEL STAIRS AND LADDERS IN ACCORDANCE WITH THE N.C. STATE BUILDING CODE. STAIR SHOP DRAWINGS SHALL BE SEALED BY A PROFESSIONAL ENGINEER REGISTERED IN NORTH CAROLINA.

FOR MISCELLANEOUS STEEL NOT SHOWN ON THESE DRAWINGS, SEE ARCHITECTURAL AND OTHER ENGINEERING DRAWINGS.

CONNECTIONS BETWEEN STRUCTURAL STEEL MEMBERS SHALL BE AS SHOWN ON STRUCTURAL DRAWING DETAILS. ALTERNATE CONNECTION DETAILS MUST BE APPROVED IN WRITING, BY THE STRUCTURAL ENGINEER OF RECORD, PRIOR TO THE SUBMITTAL OF SHOP DRAWINGS.

SUBMIT ERECTION AND SHOP DRAWINGS TO THE STRUCTURAL ENGINEER FOR REVIEW PRIOR TO FABRICATION.

SHEAR STUDS

SHEAR STUDS SHALL BE 3/4" DIAMETER, PROJECT A MINIMUM OF 1-1/2" ABOVE THE METAL DECK, AND SHALL BE FIELD APPLIED TO FILLER BEAMS THROUGH THE DECK. WELD STUDS DIRECTLY TO GIRDER BEAMS. SPACE STUDS UNIFORMLY ON EACH SIDE OF THE BEAM MIDSPAN UNLESS OTHERWISE NOTED. THE RECOMMENDED PROCEDURE FOR WELDING STUDS THROUGH THE DECK IS AS FOLLOWS:

1. DECK SHALL BE FREE OF FOREIGN MATERIALS, MUD, AND WATER. TOP OF STEEL BEAMS SHALL BE UNPAINTED.
2. SET UP WELDING GUN PRIOR TO EACH WORKDAY AND AFTER ANY LENGTHY WORK STOPPAGE. GUN OPERATOR SHALL WELD TWO TEST STUDS, INSPECT AND BEND STUDS 45 DEGREES. REPEAT THIS PROCEDURE UNTIL PROPER WELD RESULTS ARE ACHIEVED.
3. PROCEED WITH STUD WELDING AFTER SATISFYING ABOVE PROCEDURES.
4. VISUALLY INSPECT EACH STUD FOR PROPER WELD. REDO ALL WELDS (OR WELD NEW STUDS) AT ALL STUDS WITH IMPROPER WELDS.
5. STUDS SHALL BE FIELD TESTED BY AN INDEPENDENT TESTING AGENCY, EMPLOYED BY THE OWNER IN ACCORDANCE WITH THE SPECIFICATIONS. FERRULES SHALL BE REMOVED PRIOR TO TESTING. SUBMIT TEST RESULTS TO THE STRUCTURAL ENGINEER FOR REVIEW PRIOR TO POURING CONCRETE.

METAL DECK

DESIGN, FABRICATION AND ERECTION OF METAL DECK SHALL CONFORM TO THE STEEL DECK INSTITUTE "DESIGN MANUAL FOR COMPOSITE DECKS, FORM DECKS AND ROOF DECKS".

FLOOR DECK SHALL BE 2VLI22 COMPOSITE DECK (2" NOMINAL DEPTH, 22 GAGE), AS MANUFACTURED BY VULCRAFT, OR APPROVED EQUAL. THE DECK SHALL BE WELDED AT 12" O.C. TO STEEL SUPPORTS. WELDING WASHERS ARE NOT REQUIRED. SIDELAPS SHALL BE FASTENED WITH SCREWS OR BUTTON PUNCHING AT A SPACING NOT TO EXCEED 36".

SUSPENDED CEILINGS, LIGHT FIXTURES, DUCTS, AND OTHER UTILITIES OR FINISHES SHALL NOT BE SUPPORTED BY THE METAL DECK.

ALL FLOOR DECK SHALL BE GALVANIZED IN CONFORMANCE WITH ASTM A653-94, G60 MINIMUM.

SUBMIT ERECTION DRAWINGS TO THE STRUCTURAL ENGINEER FOR REVIEW PRIOR TO FABRICATION.

LIGHT GAGE STRUCTURAL STEEL FRAMING

LIGHT GAGE STRUCTURAL STEEL INCLUDES ALL AXIALLY OR WIND LOADED LIGHT GAGE STEEL STUDS, TRACK, JOISTS, TRUSSES, BRIDGING AND RELATED ACCESSORIES AS INDICATED ON THE DRAWINGS.

DESIGN, FABRICATION AND ERECTION OF LIGHT GAGE STRUCTURAL STEEL FRAMING SHALL BE IN ACCORDANCE WITH THE AMERICAN IRON AND STEEL INSTITUTE "SPECIFICATION FOR THE DESIGN OF COLD-FORMED STEEL STRUCTURAL MEMBERS".

THE STEEL USED SHALL HAVE THE FOLLOWING MINIMUM YIELD STRESS:

LIGHT GAGE STEEL STUDS	33 KSI
TRACKS FOR STEEL STUDS	33 KSI
LIGHT GAGE STEEL JOISTS & HEADERS	33 KSI

THE MEMBER DESIGNATIONS SHOWN ON THESE DRAWINGS ARE SSMA STANDARD MATERIAL DESIGNATIONS.

THE CONTRACTOR SHALL SUBMIT THE PROPOSED MATERIAL SUPPLIER'S PHYSICAL STRUCTURAL PROPERTIES AND LOAD TABLES FOR REVIEW.

ALL LIGHT GAGE STRUCTURAL STEEL FRAMING SHALL BE GALVANIZED, IN ACCORDANCE WITH THE MANUFACTURER'S RECOMMENDATIONS.

SPLICES IN STEEL STUDS, JOISTS, AND HEADERS SHALL NOT BE PERMITTED EXCEPT WHERE SPECIFICALLY SHOWN ON THE DRAWINGS.

FASTENING OF COMPONENTS SHALL BE WITH SELF TAPPING SCREWS OR WELDS. WELDING SHALL BE IN ACCORDANCE WITH SECTION 6.0 OF THE AMERICAN WELDING SOCIETY'S "STRUCTURAL WELDING CODE – SHEET METAL" (AWS D1.3-8). ALL WELDS SHALL BE TOUCHED UP WITH A ZINC RICH PAINT.

SOLID WOOD FRAMING, HEADERS AND PLYWOOD

ALL SOLID WOOD FRAMING SHALL COMPLY WITH THE NATIONAL FOREST PRODUCTS ASSOCIATION "NATIONAL DESIGN SPECIFICATION FOR WOOD CONSTRUCTION."

ALL SOLID FRAMING SHALL BE SPRUCE-PINE-FIR #2 OR BETTER, UNLESS NOTED OTHERWISE ON THE PLANS.

PLYWOOD SHALL CONFORM TO THE AMERICAN PLYWOOD ASSOCIATION "PLYWOOD DESIGN SPECIFICATION." PLYWOOD SHALL BE CDX (UNO). PLYWOOD CONSTRUCTION SHALL BE IN ACCORDANCE WITH THE APA "DESIGN/CONSTRUCTION GUIDE – RESIDENTIAL AND COMMERCIAL".

ALL MEMBERS SHALL BE FRAMED, ANCHORED, TIED AND BRACED IN ACCORDANCE WITH GOOD CONSTRUCTION PRACTICE AND THE NORTH CAROLINA STATE BUILDING CODE.

ALL WOOD IN CONTACT WITH MASONRY OR EXPOSED TO THE WEATHER SHALL BE PRESSURE PRESERVATIVE TREATED TO THE RETENTIONS REQUIRED BY SECTION 2303 OF THE BUILDING CODE.

NAIL SIZES SPECIFIED ON PLANS AND DETAILS ARE "STANDARD COMMON NAILS".

ALL WOOD FRAMING SHALL BE FASTENED IN ACCORDANCE WITH TABLE 2304.9.1 OF THE BUILDING CODE MINIMUM, UNLESS NOTED OTHERWISE.

WOOD TRUSSES

THE WOOD TRUSS FABRICATOR IS RESPONSIBLE FOR THE DESIGN OF THE WOOD TRUSSES. SUBMIT CALCULATIONS WITH THE SHOP DRAWINGS SEALED BY A PROFESSIONAL ENGINEER LICENSED IN NORTH CAROLINA TO THE STRUCTURAL ENGINEER FOR REVIEW PRIOR TO FABRICATION.

LUMBER DEFECTS SUCH AS WANE OR KNOTS OCCURRING IN THE CONNECTOR PLATE AREA MUST NOT AFFECT MORE THAN TEN PERCENT OF REQUIRED PLATE AREA OR NUMBER OF EFFECTIVE TEETH REQUIRED FOR EACH TRUSS MEMBER. CONNECTOR PLATES SHALL BE APPLIED TO BOTH FACES OF TRUSS AT EACH JOINT, AND SHOULD PROVIDE FIRM EVEN CONTACT BETWEEN THE PLATE AND THE WOOD. ALL WOOD MEMBERS SHALL BE ACCURATELY CUT AND FABRICATED SO THAT ALL MEMBERS HAVE GOOD BEARING AND ALL COMPLETED TRUSS UNITS ARE UNIFORM. SEE LATEST EDITION OF TRUSS PLATE INSTITUTE "QUALITY CONTROL MANUAL" FOR TOLERANCES AND OTHER SPECIAL REQUIREMENTS.

THE DESIGN, FABRICATION AND ERECTION OF THE WOOD TRUSSES SHALL COMPLY WITH THE "NATIONAL DESIGN SPECIFICATION FOR WOOD CONSTRUCTION", AND THE "DESIGN SPECIFICATION FOR METAL PLATE CONNECTED WOOD TRUSSES".

ALL TRUSSES MUST BE SECURELY BRACED BOTH DURING ERECTION AND AFTER PERMANENT INSTALLATION IN ACCORDANCE WITH WTCA & TRUSS PLATE INSTITUTE DOCUMENT "GUIDE TO GOOD PRACTICE FOR HANDLING, INSTALLING, RESTRAINING, & BRACING OF METAL PLATE CONNECTED WOOD TRUSSES (BCSI)".

THE TRUSS FABRICATOR SHALL SHOW ALL RECOMMENDED BRACING, BOTH TEMPORARY AND PERMANENT, ON THE TRUSS SHOP DRAWINGS. ALSO, THE DRAWINGS MUST SHOW ALL RECOMMENDED DETAILS FOR CONNECTING THE TRUSSES TO EACH OTHER AND/OR THEIR SUPPORTS.

TRUSS MEMBERS AND COMPONENTS SHALL NOT BE CUT, DRILLED, NOTCHED, SPLICED, OR OTHERWISE ALTERED IN ANY WAY WITHOUT WRITTEN PERMISSION FROM THE DESIGN ENGINEER.

L&A LYSAGHT & ASSOCIATES
structural engineers
120 SAINT MARY'S ST.
RALEIGH, NC 27605
PH: (919) 833-0495
FAX: (919) 833-7630
N.C. FIRM LICENSE C-0621

PRELIMINARY
DO NOT USE FOR CONSTRUCTION

MAURER ARCHITECTURE
115.5 EAST HARGETT STREET, SUITE 300
RALEIGH, NORTH CAROLINA 27601
TEL. 919-829-4969 FAX. 919-829-0860

DATE	10/28/16
DR.	JES
CH.	
PROJ. #	LA-11199
REVISIONS	DATE

STRUCTURAL NOTES

S0.1

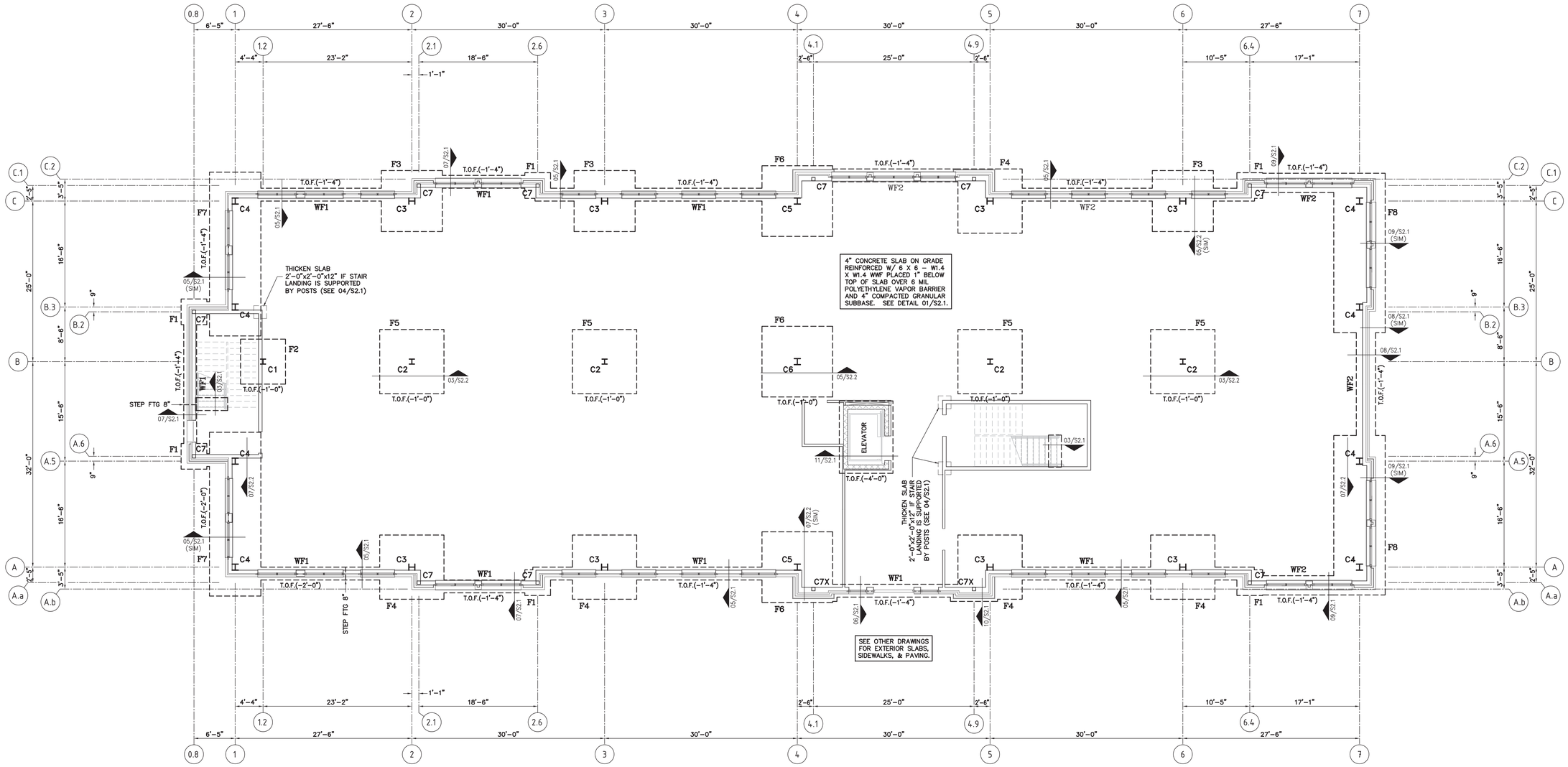

FOUNDATION PLAN 01

SCALE : 1/8" = 1'–0"

PLAN N

FOUNDATION PLAN NOTES :

1. THE REFERENCE FINISH FLOOR ELEVATION = 0'–0" (ACTUAL FINISH FLOOR = 336.6'). SEE DETAIL 01/S2.1 FOR TYPICAL SLAB ON GRADE CONSTRUCTION.
2. SEE DETAIL 02/S2.1 FOR STEPPED FOOTING CONSTRUCTION. FOOTING STEPS ARE SHOWN IN APPROXIMATE LOCATIONS ON THE PLAN. THE GENERAL CONTRACTOR SHALL DETERMINE FINAL FOOTING STEP LOCATIONS BASED ON FINISH GRADES.
3. SEE THE ARCHITECTURAL PLANS FOR LOCATIONS OF BRICK CONTROL JOINTS. REFER TO THE STRUCTURAL NOTES FOR BRICK CONTROL JOINT SPACING LIMITATIONS.
4. T.O.F.(–1'–4") DENOTES A TOP OF FOOTING ELEVATION 1'–4" BELOW THE FINISH FLOOR.
5. SEE ARCHITECTURAL DRAWINGS FOR WALL DIMENSIONS NOT NOTED ON THIS PLAN. WALL DIMENSIONS SHOWN ON THIS PLAN ARE TO OUTSIDE FACE OF VENEER AT TYPICAL 1'–0" WALL THICKNESS. SEE ARCHITECTURAL FOR BRICK COURSING REQ'MTS.
6. SEE SHEET S0.1 FOR ADDITIONAL STRUCTURAL NOTES.

COLUMN SCHEDULE

MARK	SIZE	BASE PLATE	ANCHOR BOLTS
C1	W 10 x 33	PL. 1–1/4" x 18" x 1'–6"	(4) 1"ø x 15", F1554 (Gr 36)
C2	W 10 x 49	PL. 1–1/2" x 18" x 1'–6"	(4) 1"ø x 15", F1554 (Gr 36)
C3	W 12 x 72	PL. 2 1/4" x 24" x 2'–0"	(4) 1 1/2"ø x 23", F2354 (Gr 36)
C4	W 12 x 79	PL. 2 1/4" x 24" x 2'–0"	(6) 1 1/2"ø x 29", F2954 (Gr 36)
C5	W 12 x 96	PL. 2 1/2" x 24" x 2'–0"	(6) 1 1/2"ø x 29", F2954 (Gr 36)
C6	W 12 x 106	PL. 2 1/2" x 24" x 2'–0"	(6) 1 1/2"ø x 29", F2954 (Gr 36)
C7	HSS6x6x1/4	PL. 3/4" x 12" x 1'–0"	(4) 3/4"ø x 15", F1554 (Gr 36)
C7X	HSS6x6x5/16	PL. 3/4" x 12" x 1'–0"	(4) 3/4"ø x 15", F1554 (Gr 36)

FOOTING SCHEDULE

MARK	SIZE	REINFORCING	DETAIL
WF1	2'–0" x 12" CONTINUOUS	(2) #5 CONT & #4 TIES 48" O.C.	SEE PLAN
WF2	3'–0" x 15" CONTINUOUS	(4) #5 CONT & #4 TIES 16" O.C. TYPICAL TOP & BOTTOM	SEE PLAN
F1	4'–0" x 4'–0" x 12"	(8) #4 BARS EACH WAY BOTTOM	01/S2.2
F2	7'–0" x 7'–0" x 15"	(9) #5 BARS EACH WAY BOTTOM	03/S2.2
F3	9'–6" x 9'–6" x 18"	(8) #4 BARS EACH WAY TOP (9) #6 BARS EACH WAY BOTTOM	06/S2.1
F4	10'–0" x 10'–0" x 18"	(8) #4 BARS EACH WAY TOP (10) #6 BARS EACH WAY BOTTOM	06/S2.1
F5	10'–0" x 10'–0" x 21"	(11) #6 BARS EACH WAY BOTTOM	03/S2.2
F6	11'–0" x 11'–0" x 21"	(8) #4 BARS EACH WAY TOP (12) #6 BARS EACH WAY BOTTOM	05/S2.2 or 07/S2.2
F7	8'–0" x 25'–6" x 24" (SEE SKETCH BELOW)	(8) #4 BARS L.W. TOP * #4 BARS AT 9" O.C. S.W. TOP (8) #6 BARS L.W. BOTTOM * #5 BARS AT 9" O.C. S.W. BOTTOM	07/S2.2
F8	8'–0" x 24'–6" x 24" (SEE SKETCH BELOW)	(8) #4 BARS L.W. TOP * #4 BARS AT 9" O.C. S.W. TOP (8) #6 BARS L.W. BOTTOM * #5 BARS AT 9" O.C. S.W. BOTTOM	07/S2.2

* L.W. BARS TOP AND BOTTOM SHALL HAVE ACI 90° HOOKS BOTH ENDS.

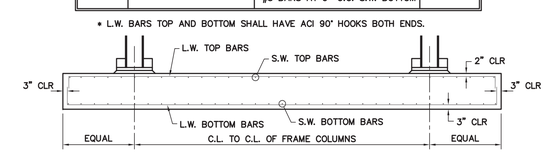

LYSAGHT & ASSOCIATES
structural engineers
120 SAINT MARY'S ST.
RALEIGH, NC 27605
PH: (919) 833–0495
FAX: (919) 833–7630
N.C. FIRM LICENSE C–0621

PRELIMINARY DO NOT USE FOR CONSTRUCTION

MAURER ARCHITECTURE
115.5 EAST HARGETT STREET, SUITE 300
RALEIGH, NORTH CAROLINA 27601
TEL. 919-829-4969 FAX. 919-829-0860

DATE	10/28/16
DR.	JES
CH.	
PROJ. #	LA-11199
REVISIONS	DATE

FOUNDATION PLAN

S1.1

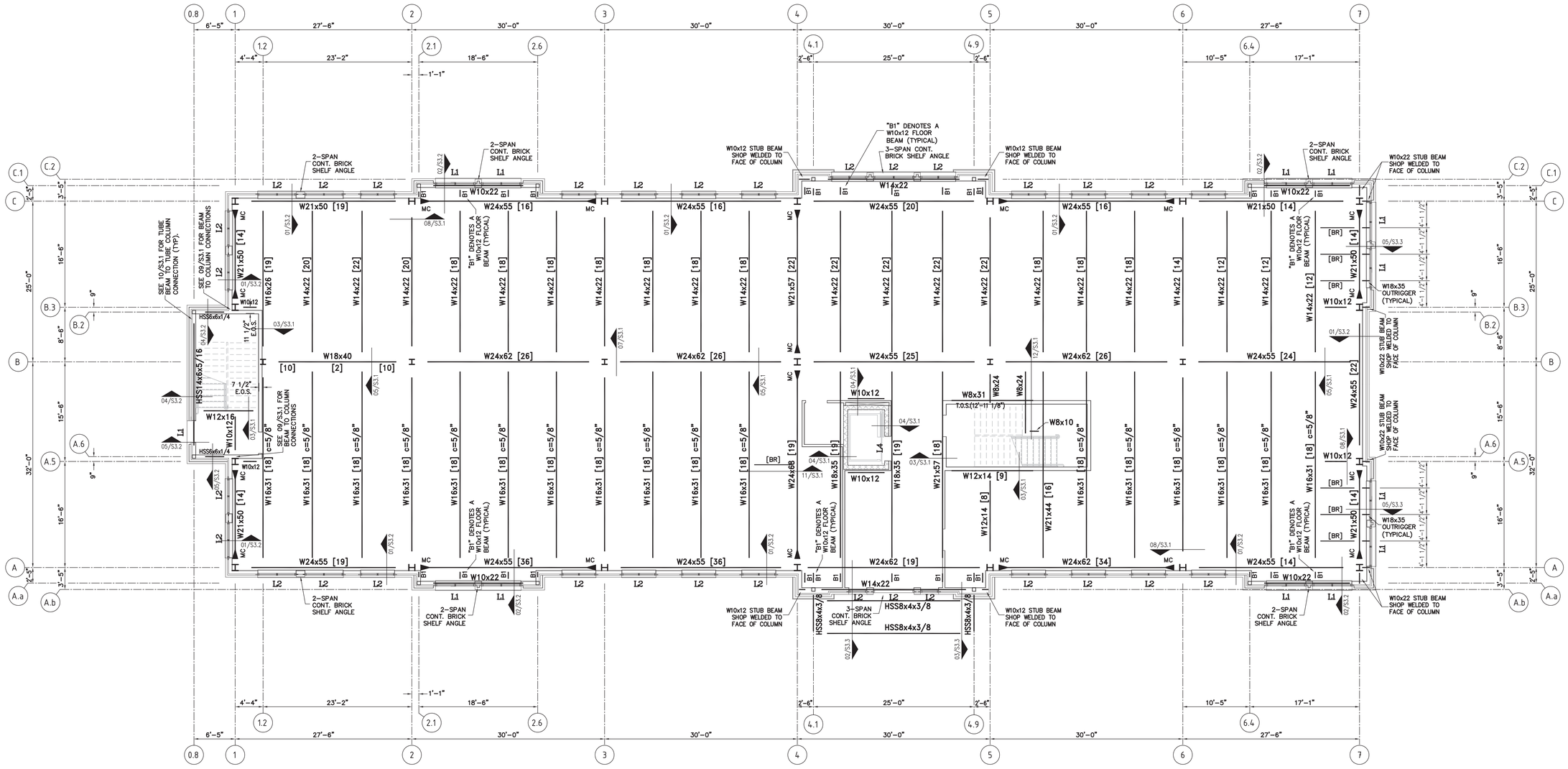

SECOND FLOOR FRAMING PLAN 01

SCALE : 1/8" = 1'-0"

FLOOR FRAMING PLAN NOTES :

1. THE REFERENCE FINISH FIRST FLOOR ELEVATION = 0'-0". ALL TOP OF STEEL (T.O.S.) ELEVATIONS ARE MEASURED FROM THIS REFERENCE ELEVATION.
2. SEE DETAIL 01/S3.1 FOR TYPICAL SECOND FLOOR SLAB CONSTRUCTION. THE FINISH SECOND FLOOR SLAB IS AT ELEVATION 14'-0". THE TYPICAL TOP OF STEEL ELEVATION FOR STEEL BEAMS IS 13'-7" UNLESS NOTED OTHERWISE. FILLER BEAMS SHALL BE EQUALLY SPACED BETWEEN COLUMN GRIDS UNLESS NOTED OTHERWISE.
3. SEE DETAIL 02/S3.1 FOR SLAB REINFORCING REQUIRED AT PENETRATIONS THROUGH THE FLOOR. REINFORCING IS REQUIRED AT ALL PENETRATIONS 10"x10" AND LARGER.
4. SEE DETAIL 03/S3.1 FOR POURSTOP MATERIAL TO BE PROVIDED AT ALL FLOOR PENETRATIONS & INTERIOR EDGES OF SLAB.
5. SEE THE FOUNDATION PLAN (S1.1) FOR COLUMN MARKS & THE COLUMN SCHEDULE.
6. SEE ARCHITECTURAL DRAWINGS FOR WALL DIMENSIONS NOT NOTED ON THIS PLAN AND FOR LOCATIONS OF WALL OPENINGS.. WALL DIMENSIONS SHOWN ON THIS PLAN ARE TO OUTSIDE FACE OF VENEER AT TYPICAL 1'-0" WALL THICKNESS. SEE ARCHITECTURAL FOR BRICK COURSING REQUIREMENTS.
7. [18] DENOTES (18) WELD STUDS SPACED EQUALLY ALONG THE TOP FLANGE OF THE BEAM.
8. BEAMS SHALL BE FABRICATED WITH CAMBER (C = x") AS NOTED ON THE PLAN. BEAMS WITHOUT NOTED CAMBER SHALL BE FABRICATED AND INSTALLED WITH NATURAL CAMBER UP.
9. MC ► DENOTES A BEAM TO COLUMN WIND MOMENT CONNECTION. SEE DETAIL 08/S3.1. SEE DETAILS 06/S3.1 & 07/S3.1 FOR TYPICAL BEAM TO TUBE COLUMN & WIDE FLANGE COLUMN SHEAR CONNECTIONS AT OTHER LOCATIONS.
10. SEE LIGHT GAGE METAL STUD WALL FRAMING NOTES THIS SHEET FOR EXTERIOR WALL CONSTRUCTION. SEE SHEET S1.3 FOR THE LINTEL SCHEDULE WITH FRAMING REQUIREMENTS AT EXTERIOR WALL OPENINGS.
11. THE STEEL STAIRS SHALL BE DESIGNED BY THE SUPPLIER FOR GRAVITY LOADS IN ACCORDANCE WITH THE NORTH CAROLINA BUILDING CODE. SUBMIT SHOP DRAWINGS SEALED BY A PROFESSIONAL ENGINEER TO THE PROJECT STRUCTURAL ENGINEER FOR REVIEW PRIOR TO FABRICATION.
12. SEE SHEET S0.1 FOR ADDITIONAL STRUCTURAL NOTES.

LIGHT GAGE METAL STUD WALL NOTES :

THE TYPICAL EXTERIOR STUD SPACING SHALL BE 16" O.C. UNLESS NOTED OTHERWISE.

ALL EXTERIOR WALLS SHALL BE CONSTRUCTED WITH 600S162-43 STUDS EXCEPT WHERE NOTED OTHERWISE. PROVIDE 400S200-68 AND 1000S162-43 STUDS WHERE SPECIFICALLY NOTED. THE NET PHYSICAL PROPERTIES FOR STUDS ARE AS FOLLOWS:

600S137-43	6", 18 GAGE STUD W/ 1-3/8" FLANGE & 3/8" RETURN	A = 0.413 in^2	Sx = 0.645 in^3	Ix = 2.041 in^4
400S200-68	4", 14 GAGE STUD W/ 2" FLANGE & 5/8" RETURN	A = 0.622 in^2	Sx = 0.780 in^3	Ix = 1.589 in^4
1000S162-43	10", 18 GAGE STUD W/ 1-5/8" FLANGE & 1/2" RETURN	A = 0.627 in^2	Sx = 1.302 in^3	Ix = 7.523 in^4

PROVIDE COLD-ROLLED BRIDGING CHANNELS AT THE THIRD POINTS OF ALL FULL HEIGHT LIGHT GAGE STUD WALLS. BRIDGING CHANNELS SHALL BE ATTACHED AT EACH STUD BY WELDING OR WITH CLIP ANGLES & SCREWS.

STUD SIZE AND OPENING FRAMING FOR INTERIOR PARTITION WALLS SHALL BE BY THE SUPPLIER. INTERIOR PARTITION WALLS SHALL BE BRACED AT THE TOP WITH PROVISIONS FOR VERTICAL DEFLECTION OF THE STRUCTURE. ALL BRACING IS THE RESPONSIBILITY OF THE LIGHT GAGE SUPPLIER. PROVIDE BRIDGING BETWEEN STUDS AT INTERIOR NON-LOAD BEARING WALLS IN ACCORDANCE WITH MANUFACTURER'S RECOMMENDATIONS.

FASTEN LIGHT GAGE MATERIAL TO LIGHT GAGE MATERIAL WITH #10 TEK SCREWS.

FASTEN LIGHT GAGE MATERIAL TO CONCRETE WITH HILTI X-U 32 P8 S15 POWDER ACTUATED FASTENERS (OR APPROVED EQUAL). SPACE FASTENERS FOR BASE TRACK TO MASONRY OR CONCRETE AT 12" O.C., MAXIMUM.

FASTEN LIGHT GAGE MATERIAL TO STRUCTURAL STEEL WITH HILTI X-U 27 P8 S23 POWDER ACTUATED FASTENERS (OR APPROVED EQUAL).

SEE DETAIL "A", AT RIGHT, FOR CONSTRUCTION OF SILLS AT EXTERIOR WALL OPENINGS.

SEE DETAIL "B", AT RIGHT, FOR CONSTRUCTION OF HEADERS AT OPENINGS IN EXTERIOR WALLS AT LINTEL MARKS L1, L2, AND L3.

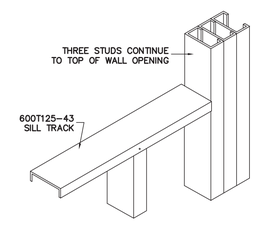

DETAIL "A" NO SCALE

EXTERIOR WALL OPENING SILL CONSTRUCTION

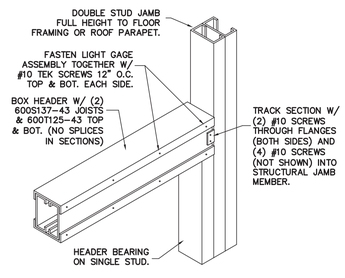

DETAIL "B" NO SCALE

EXTERIOR WALL OPENING HEADER CONSTRUCTION

LYSAGHT & ASSOCIATES structural engineers
120 SAINT MARY'S ST.
RALEIGH, NC 27605
PH: (919) 833-0495
FAX: (919) 833-7630
N.C. FIRM LICENSE C-0621

PRELIMINARY DO NOT USE FOR CONSTRUCTION

MAURER ARCHITECTURE
115.5 EAST HARGETT STREET, SUITE 300
RALEIGH, NORTH CAROLINA 27601
TEL. 919-829-4969 FAX. 919-829-0860

DATE	10/28/16
DR.	JES
CH.	
PROJ. #	LA-11199
REVISIONS	DATE

SECOND FLOOR FRAMING PLAN

S1.2

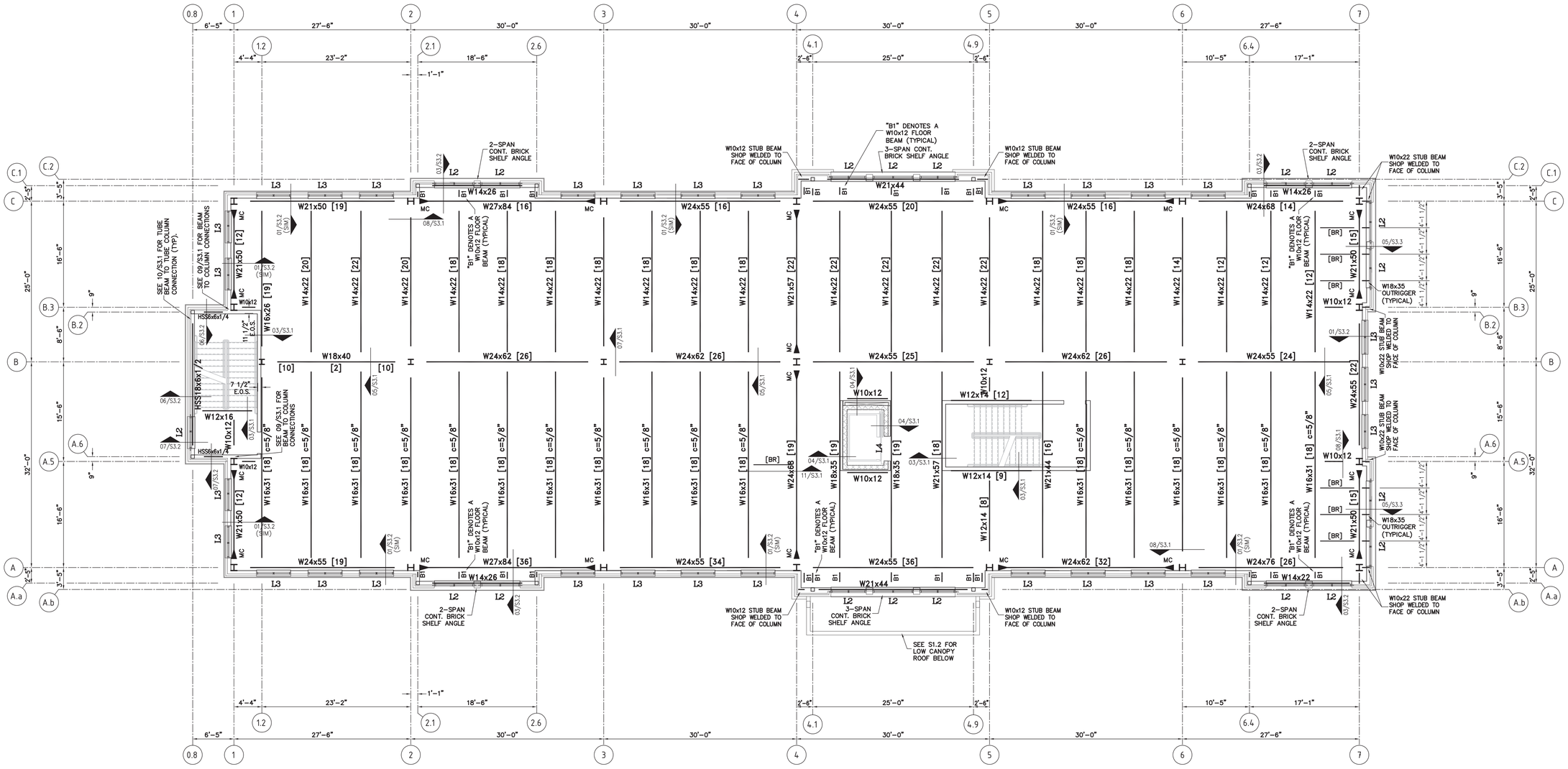

THIRD FLOOR FRAMING PLAN 01

SCALE : 1/8" = 1'-0"

FLOOR FRAMING PLAN NOTES :

1. THE REFERENCE FINISH FIRST FLOOR ELEVATION = 0'-0". ALL TOP OF STEEL (T.O.S.) ELEVATIONS ARE MEASURED FROM THIS REFERENCE ELEVATION.
2. SEE DETAIL 01/S3.1 FOR TYPICAL SECOND FLOOR SLAB CONSTRUCTION. THE FINISH SECOND FLOOR SLAB IS AT ELEVATION 28'-0". THE TYPICAL TOP OF STEEL ELEVATION FOR STEEL BEAMS IS 27'-7" UNLESS NOTED OTHERWISE. FILLER BEAMS SHALL BE EQUALLY SPACED BETWEEN COLUMN GRIDS UNLESS NOTED OTHERWISE.
3. SEE DETAIL 02/S3.1 FOR SLAB REINFORCING REQUIRED AT PENETRATIONS THROUGH THE FLOOR. REINFORCING IS REQUIRED AT ALL PENETRATIONS 10"x10" AND LARGER.
4. SEE DETAIL 03/S3.1 FOR POURSTOP MATERIAL TO BE PROVIDED AT ALL FLOOR PENETRATIONS & INTERIOR EDGES OF SLAB.
5. SEE THE FOUNDATION PLAN (S1.1) FOR COLUMN MARKS & THE COLUMN SCHEDULE.
6. SEE ARCHITECTURAL DRAWINGS FOR WALL DIMENSIONS NOT NOTED ON THIS PLAN AND FOR LOCATIONS OF WALL OPENINGS. WALL DIMENSIONS SHOWN ON THIS PLAN ARE TO OUTSIDE FACE OF VENEER AT TYPICAL 1'-0" WALL THICKNESS. SEE ARCHITECTURAL FOR BRICK COURSING REQUIREMENTS.
7. [18] DENOTES (18) WELD STUDS SPACED EQUALLY ALONG THE TOP FLANGE OF THE BEAM.
8. BEAMS SHALL BE FABRICATED WITH CAMBER (C = x") AS NOTED ON THE PLAN. BEAMS WITHOUT NOTED CAMBER SHALL BE FABRICATED AND INSTALLED WITH NATURAL CAMBER UP.
9. MC DENOTES A BEAM TO COLUMN WIND MOMENT CONNECTION. SEE DETAIL 08/S3.1. SEE DETAILS 06/S3.1 & 07/S3.1 FOR TYPICAL BEAM TO TUBE COLUMN & WIDE FLANGE COLUMN SHEAR CONNECTIONS AT OTHER LOCATIONS.
10. SEE LIGHT GAGE METAL STUD WALL FRAMING NOTES ON SHEET S1.2 FOR EXTERIOR WALL CONSTRUCTION. SEE THE LINTEL SCHEDULE THIS SHEET FOR FRAMING REQUIREMENTS AT EXTERIOR WALL OPENINGS.
11. THE STEEL STAIRS SHALL BE DESIGNED BY THE SUPPLIER FOR GRAVITY LOADS IN ACCORDANCE WITH THE NORTH CAROLINA BUILDING CODE. SUBMIT SHOP DRAWINGS SEALED BY A PROFESSIONAL ENGINEER TO THE PROJECT STRUCTURAL ENGINEER FOR REVIEW PRIOR TO FABRICATION.
12. SEE SHEET S0.1 FOR ADDITIONAL STRUCTURAL NOTES.

LINTEL SCHEDULE

MARK	SIZE	MAX. SPAN	END BRNG	DETAIL
L1	BOX HEADER W/ (2) 6-CWN-18 JOISTS & 18ga TRACK TOP & BOTTOM. SEE "B"/S1.2. GALV. WT7x17 BRICK SHELF	6'-4"	"B"/S1.2 8" @ WT	
L2	BOX HEADER W/ (2) 6-CWN-18 JOISTS & 18ga TRACK TOP & BOTTOM. SEE "B"/S1.2. GALV. L4x4x1/4 BRICK SHELF ANGLE	6'-4"	"B"/S1.2 8" @ ANGLE	
L3	BOX HEADER W/ (2) 6-CWN-18 JOISTS & 18ga TRACK TOP & BOTTOM. SEE "B"/S1.2.	6'-4"	"B"/S1.2	EIFS
L4	8" DEEP MASONRY BOND BEAM W/ (2) #5 CONT.	4'-0"	8"	

AT LINTEL MARK L1, REFER TO ARCHITECTURAL PLANS FOR LOCATIONS OF CURVED WINDOW HEADS. AT THESE OPENINGS, LOCATE THE LIGHT GAUGE HEADER AT THE APEX OF THE OPENING AND PROVIDE CRIPPLE STUD FRAMING TO FORM CURVE. FABRICATE BRICK SHELF CURVED TO SPECIFIED RADIUS W/ 8" FLAT ENDS FOR BEARING SUPPORT.

LYSAGHT & ASSOCIATES structural engineers
120 SAINT MARY'S ST.
RALEIGH, NC 27605
PH: (919) 833-0495
FAX: (919) 833-7630
N.C. FIRM LICENSE C-0621

PRELIMINARY DO NOT USE FOR CONSTRUCTION

MAURER ARCHITECTURE
115.5 EAST HARGETT STREET, SUITE 300
RALEIGH, NORTH CAROLINA 27601
TEL. 919-829-4969 FAX. 919-829-0860

DATE	10/28/16
DR.	JES
CH.	
PROJ. #	LA-11199
REVISIONS	DATE

THIRD FLOOR FRAMING PLAN

S1.3

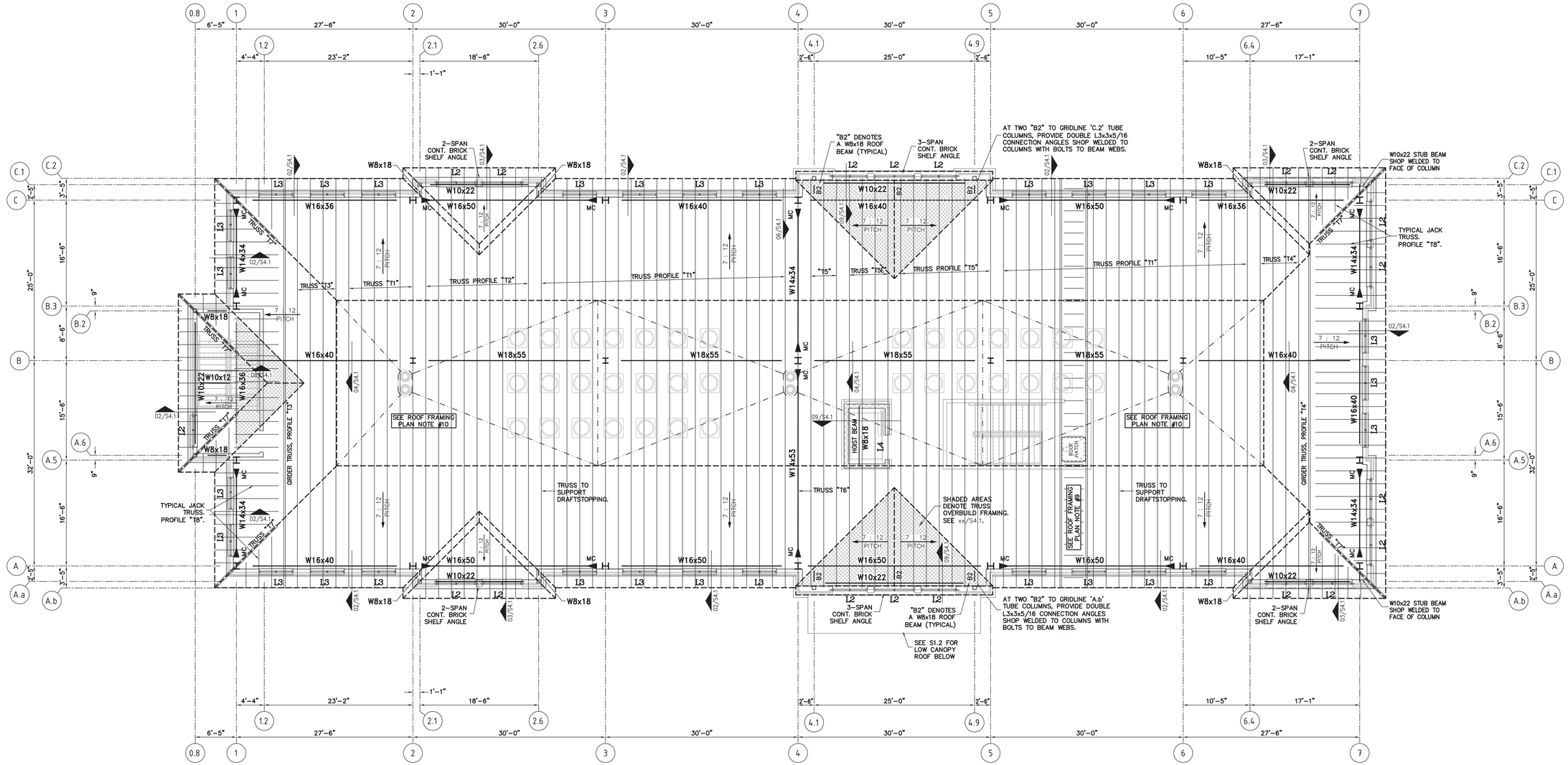

ROOF FRAMING PLAN 01

SCALE : 1/8" = 1'-0"

PLAN N

ROOF FRAMING PLAN NOTES :

1. THE TYPICAL ROOF TRUSS BEARING ELEVATION SHALL BE AT REFERENCE ELEVATION 40'-0". LOCATE T.O.S.(39'-9") FOR ALL STEEL BEAMS UNLESS NOTED OTHERWISE.
2. THE ROOF SHEATHING SHALL BE 5/8" THICK, 40/20 MIN. APA RATED CDX PLYWOOD OR OSB. ATTACH SHEATHING TO FRAMING WITH 10d NAILS SPACED 6" O.C. AT PANEL EDGES AND 12" O.C. AT INTERMEDIATE SUPPORT LOCATIONS. SEE DETAIL 01/S4.1.
3. SHADED AREAS ON THE FRAMING PLAN DENOTE OVERBUILT TRUSS VALLEY-SET FRAMING OR STICK FRAMING. IF STICK FRAMING, USE 2x6'S 16" O.C. ON TOP OF MAIN ROOF SHEATHING. SEE DETAIL 08/S4.1.
4. GYPSUM SHEATHING (1/2" MINIMUM THICKNESS) IS TO BE INSTALLED AT THE UNDERSIDE OF TRUSS BOTTOM CHORDS. SHOULD THE SHEATHING BE DELETED FROM THE CONSTRUCTION REQUIREMENTS, CONTACT THE STRUCTURAL ENGINEER FOR TRUSS BOTTOM CHORD BRACING THAT IS NECESSARY TO STABILIZE THE TRUSSES WHEN SUBJECTED TO NET WIND UPLIFT LOADS.
5. SEE THE FOUNDATION PLAN (S1.1) FOR COLUMN MARKS & THE COLUMN SCHEDULE.
6. SEE ARCHITECTURAL DRAWINGS FOR WALL DIMENSIONS NOT NOTED ON THIS PLAN AND FOR LOCATIONS OF WALL OPENINGS.. WALL DIMENSIONS SHOWN ON THIS PLAN ARE TO OUTSIDE FACE OF VENEER AT TYPICAL 1'-0" WALL THICKNESS. SEE ARCHITECTURAL FOR BRICK COURSING REQUIREMENTS.
7. SEE LIGHT GAGE METAL STUD WALL FRAMING NOTES ON SHEET S1.2 FOR EXTERIOR WALL CONSTRUCTION. SEE THE LINTEL SCHEDULE ON SHEET S1.3 FOR FRAMING REQUIREMENTS AT EXTERIOR WALL OPENINGS.
8. MC ► DENOTES A BEAM TO COLUMN WIND MOMENT CONNECTION. SEE DETAIL 06/S4.1. SEE DETAIL 05/S4.1 FOR TYPICAL BEAM TO COLUMN SHEAR CONNECTIONS.
9. PROVIDE GIRDER TRUSSES TO CREATE 48" CLEAR OPENING FOR ROOF HATCH. PROVIDE 2x6 LADDER FRAMING BETWEEN TOP CHORDS OF TRUSSES SPACED 24" O.C. ATTACH LADDER FRAMING TO TRUSSES WITH SIMPSON LU24 JOIST HANGER EACH END.
10. TRUSS FRAMING IS FLAT IN THE CENTER ROOF AREA. PROVIDE TAPERED INSULATION THAT RESULTS IN A MINIMUM 1/4:12 SLOPE TO ROOF DRAINS.
11. SEE SHEET S1.5 FOR TRUSS DESIGN NOTES AND TRUSS PROFILES. TRUSSES SHALL BE SPACED AT 24" O.C., MAXIMUM (UNLESS NOTED OTHERWISE).
12. SEE SHEET S0.1 FOR ADDITIONAL STRUCTURAL NOTES.

LYSAGHT & ASSOCIATES
structural engineers
120 SAINT MARY'S ST.
RALEIGH, NC 27605
PH: (919) 833-0495
FAX: (919) 833-7630
N.C. FIRM LICENSE C-0621

PRELIMINARY DO NOT USE FOR CONSTRUCTION

MAURER ARCHITECTURE
115.5 EAST HARGETT STREET, SUITE 300
RALEIGH, NORTH CAROLINA 27601
TEL. 919-829-4969 FAX. 919-829-0860

DATE	10/28/16
DR.	JES
CH.	
PROJ. #	LA-11199
REVISIONS	DATE

ROOF FRAMING PLAN

S1.4

NOTE A: SUSPENDED MECHANICAL AHU DESIGNED FOR TENNANT FITUP WITH MAXIMUM WEIGHT OF 250 LBS TO BE SUPPORTED BY (2) TRUSSES MINIMUM. MAY BE LOCATED AT ANY LOCATION ALONG TRUSS BOTTOM CHORD. NO MORE THAN ONE UNIT TO BE SUPPORTED BY ANY TRUSS (TYPICAL ALL ROOF TRUSSES).

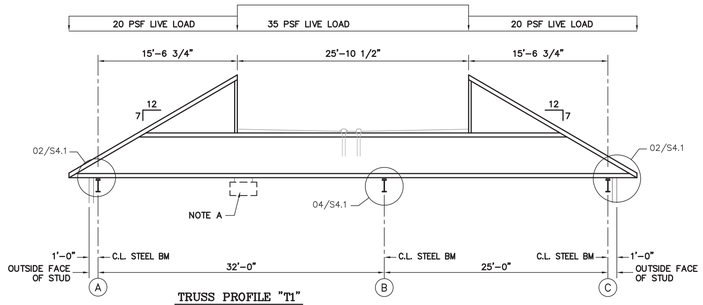

TRUSS PROFILE "T1"
SCALE : 1/8" = 1'-0"

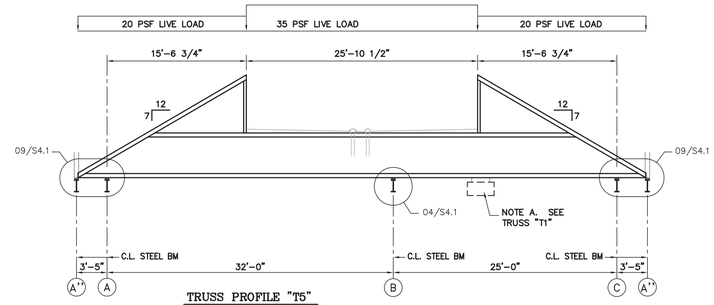

TRUSS PROFILE "T5"
SCALE : 1/8" = 1'-0"

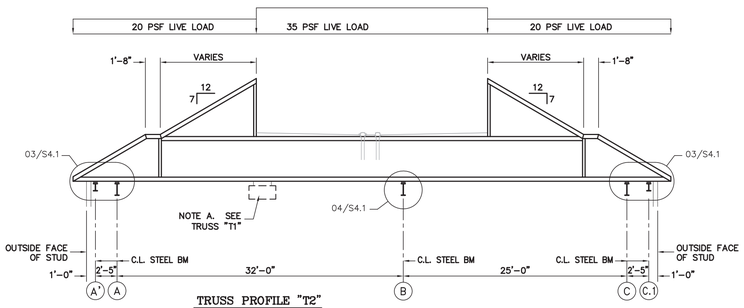

TRUSS PROFILE "T2"
SCALE : 1/8" = 1'-0"

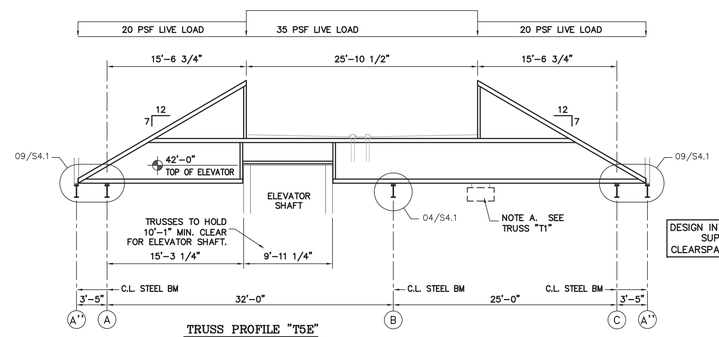

TRUSS PROFILE "T5E"
SCALE : 1/8" = 1'-0"

DESIGN INTENT IS THAT THE TRUSS IS NOT SUPPORTED AT ELEVATOR AND CLEARSPANS BETWEEN GRIDLINES '3' & '6'.

ROOF TRUSS DESIGN NOTES :

1. THE GENERAL CONTRACTOR SHALL VERIFY DIMENSIONS FOR ALL TRUSS TYPES IN THE FIELD PRIOR TO FABRICATION. TRUSS PROFILE DIMENSIONS ARE TO FACE OF STUD.
2. TRUSSES SHALL BE SPACED AT 24" O.C. MAXIMUM UNLESS OTHERWISE NOTED ON THE FRAMING PLANS.
3. FINAL TRUSS WEB CONFIGURATIONS ARE TO BE DETERMINED BY THE FABRICATOR.
4. THE SUPPLIER SHALL PROVIDE CALCULATIONS FOR ALL TRUSS TYPES, SEALED BY A PROFESSIONAL ENGINEER REGISTERED IN NORTH CAROLINA, FOR REVIEW BY THE PROJECT STRUCTURAL ENGINEER OF RECORD PRIOR TO FABRICATION.
5. THE SUPPLIER SHALL DESIGN ALL TRUSS TYPES FOR A TOTAL ROOF DEAD LOAD OF 20 PSF (10 PSF AT THE TOP CHORD & 10 PSF AT THE BOTTOM CHORD). THE DESIGN ROOF LIVE LOAD IS 20 PSF ON PITCHED TOP CHORD AREAS AND 35 PSF AT FLAT TOP CHORD AREAS. DESIGN TRUSS BOTTOM CHORDS FOR A SUSPENDED CONCENTRATED MECH. UNIT LOAD OF 200 LBS, APPLIED AT ANY LOCATION ALONG THE TRUSS, IN COMBINATION WITH THE DESIGN DEAD & LIVE LOADS.

   IN ADDITION TO THE DESIGN DEAD AND LIVE LOADS NOTED ABOVE, THE ROOF TRUSSES SHALL BE DESIGNED IN ACCORDANCE WITH ASCE 7-05 FOR A DESIGN WIND SPEED OF 95 MPH WITH EXPOSURE 'C'. 10 PSF MAXIMUM SHALL BE USED FOR THE DEAD LOAD WITH ALL WIND LOAD CASES.
6. SPLICES IN TRUSSES SHALL BE LOCATED AS REQUIRED BY THE FABRICATOR AND NOTED ON THE ERECTION DRAWINGS.
7. THE ERECTION DRAWINGS SHALL NOTE ALL LOCATIONS OF TEMPORARY BRIDGING OR BRACING REQUIRED TO STABILIZE THE TRUSSES DURING ERECTION, PRIOR TO THE INSTALLATION OF ROOF SHEATHING.
8. THE CONTRACTOR SHALL CONSULT THE LATEST EDITION OF BCSI FOR ERECTION BRACING GUIDELINES. PROPER WOOD TRUSS HANDLING AND ERECTION BRACING ARE THE RESPONSIBILITY OF THE CONTRACTOR.

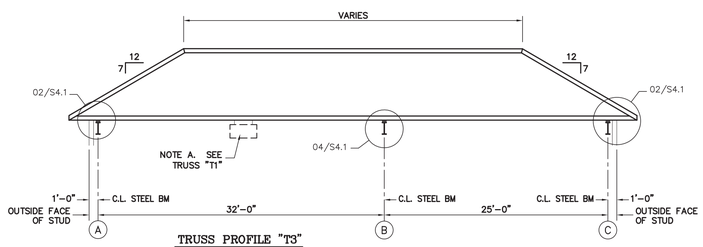

TRUSS PROFILE "T3"
SCALE : 1/8" = 1'-0"
STEP-DOWN HIP TRUSS

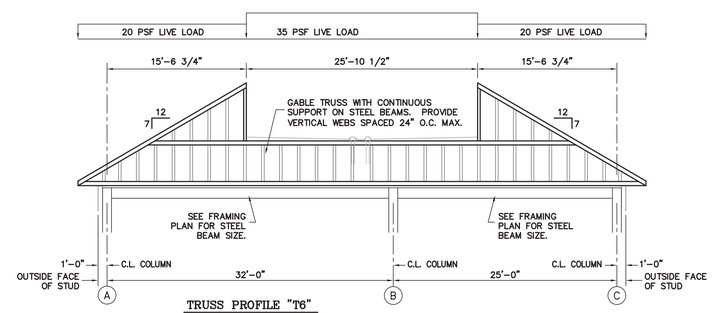

TRUSS PROFILE "T6"
SCALE : 1/8" = 1'-0"

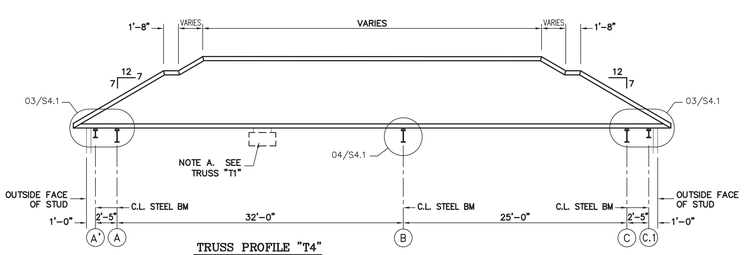

TRUSS PROFILE "T4"
SCALE : 1/8" = 1'-0"
STEP-DOWN HIP TRUSS

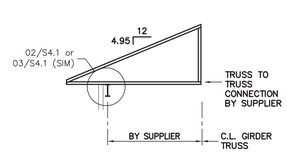

TRUSS PROFILE "T7"
SCALE : 1/8" = 1'-0"
TYPICAL HIP/VALLEY TRUSS

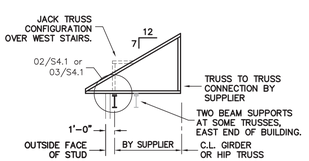

TRUSS PROFILE "T8"
SCALE : 1/8" = 1'-0"
TYPICAL JACK TRUSS

LYSAGHT & ASSOCIATES
structural engineers
120 SAINT MARY'S ST.
RALEIGH, NC 27605
PH: (919) 833-0495
FAX: (919) 833-7630
N.C. FIRM LICENSE C-0621

PRELIMINARY DO NOT USE FOR CONSTRUCTION

MAURER ARCHITECTURE
115.5 EAST HARGETT STREET, SUITE 300
RALEIGH, NORTH CAROLINA 27601
TEL. 919-829-4969 FAX. 919-829-0860

DATE	10/28/16
DR.	JES
CH.	
PROJ. #	LA-11199
REVISIONS	DATE

ROOF TRUSS NOTES & PROFILES

S1.5

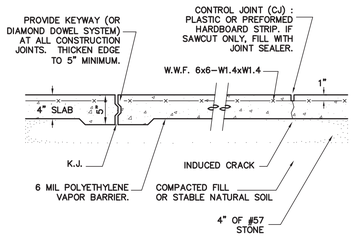

NOTES:

USE A KEYED CONSTRUCTION JOINT (K.J.) BETWEEN POURS.

SLAB IS ADEQUATE FOR A LIGHT COMMERCIAL OCCUPANCY WITH A MAXIMUM LIVE LOAD OF 100 PSF.

DETAIL 01 — 1" SCALE

TYP. SLAB ON GRADE, CONTROL JOINT, CONSTRUCTION JOINT

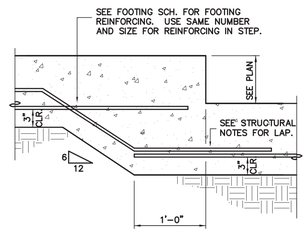

DETAIL 02 — 1" SCALE

STEPPED FOOTING DETAIL

NOTES

SEE ARCHITECTURAL PLANS FOR STAIR LAYOUTS.

STEEL STAIRS SHALL BE DESIGNED BY THE SUPPLIER FOR A 100 PSF LIVE LOAD.

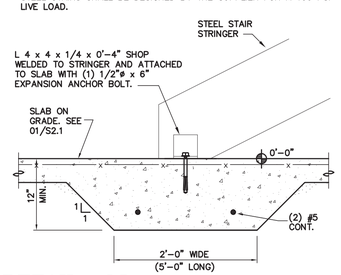

DETAIL 03 — 1" SCALE

THICKENED SLAB AT STAIR STRINGERS

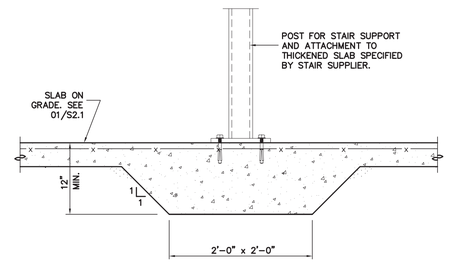

DETAIL 04 — 1" SCALE

THICKENED SLAB AT STAIR LANDING POSTS

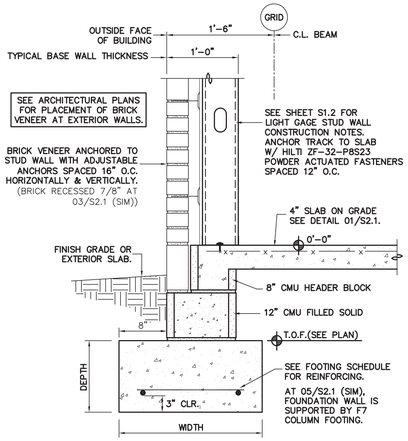

DETAIL 05 — 1" SCALE

EXTERIOR WALL FOOTING SECTION

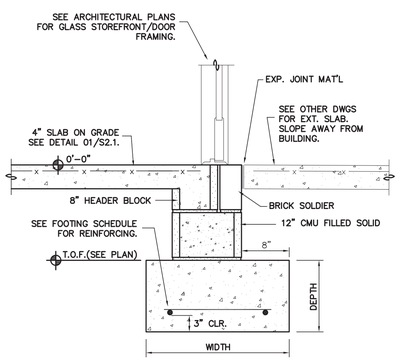

DETAIL 06 — 1" SCALE

WALL FOOTING DETAIL AT ENTRIES

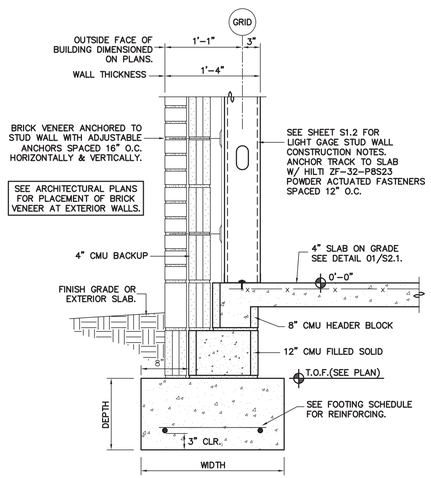

DETAIL 07 — 1" SCALE

EXTERIOR WALL FOOTING SECTION

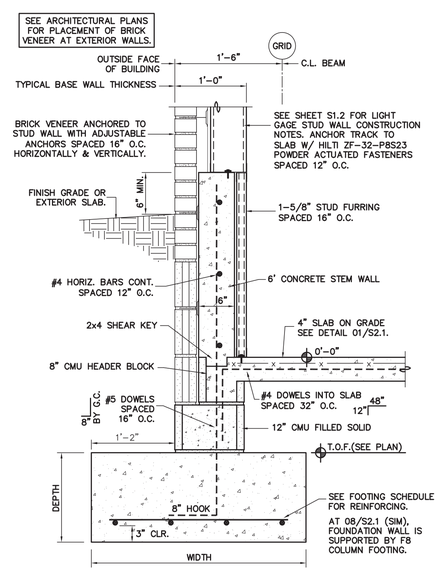

DETAIL 08 — 1" SCALE

EXTERIOR WALL FOOTING SECTION

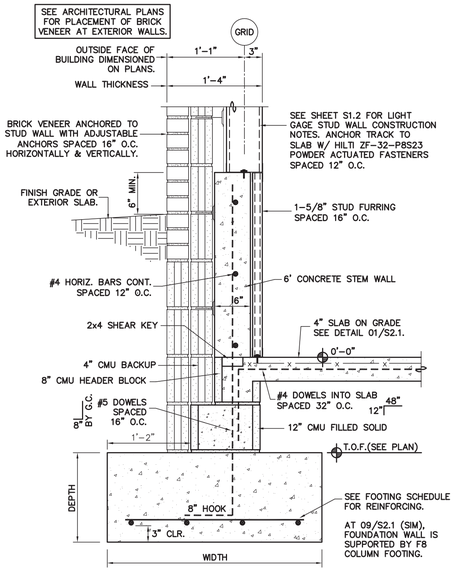

DETAIL 09 — 1" SCALE

EXTERIOR WALL FOOTING SECTION

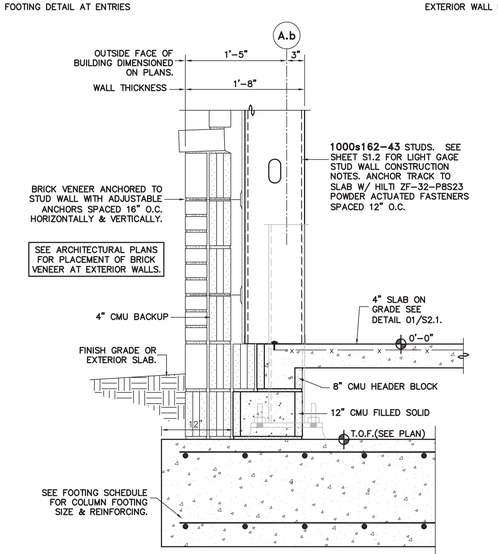

DETAIL 10 — 1" SCALE

EXTERIOR WALL FOOTING SECTION

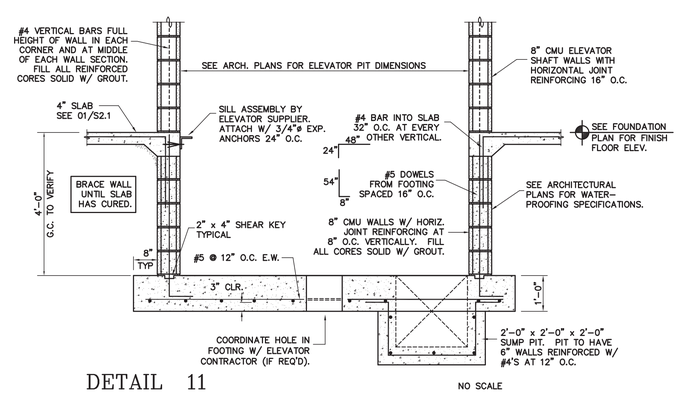

DETAIL 11 — NO SCALE

SECTION AT ELEVATOR PIT

LYSAGHT & ASSOCIATES
structural engineers
120 SAINT MARY'S ST.
RALEIGH, NC 27605
PH: (919) 833-0495
FAX: (919) 833-7630
N.C. FIRM LICENSE C-0621

PRELIMINARY DO NOT USE FOR CONSTRUCTION

MAURER ARCHITECTURE
115.5 EAST HARGETT STREET, SUITE 300
RALEIGH, NORTH CAROLINA 27601
TEL. 919-829-4969 FAX. 919-829-0860

DATE	10/28/16
DR.	JES
CH.	
PROJ. #	LA-11199
REVISIONS	DATE

FOUNDATION DETAILS

S2.1

SEE 02/S2.2 FOR PLAN VIEW AT COLUMN BASE PLATES.

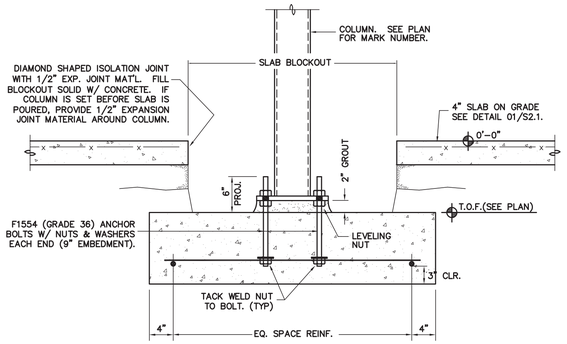

SEE FOOTING SCHEDULE FOR SIZE & REINFORCEMENT.

DETAIL 01 — 1" SCALE

TUBE COLUMN SETTING DETAIL

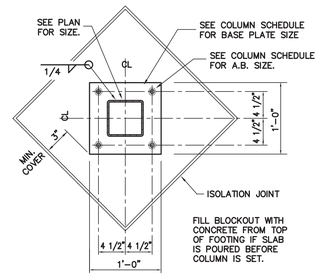

C7 – HSS6x6x1/4
C7X – HSS6x6x5/16

DETAIL 02 — 1" SCALE

PLAN @ COLUMN BASE PLATE – TUBE

SEE 03/S2.2 FOR PLAN VIEW AT COLUMN BASE PLATES.

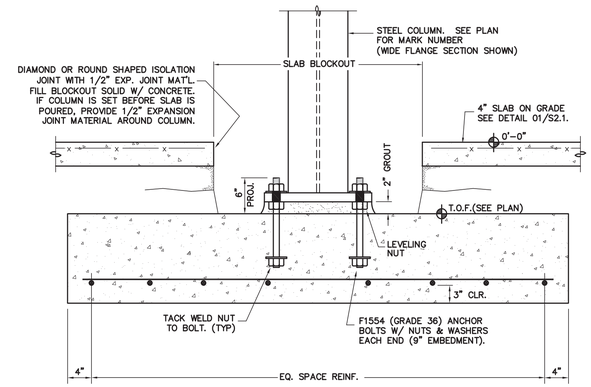

SEE FOOTING SCHEDULE FOR SIZE & REINFORCEMENT.

DETAIL 03 — 1" SCALE

WIDE FLANGE COLUMN SETTING DETAIL

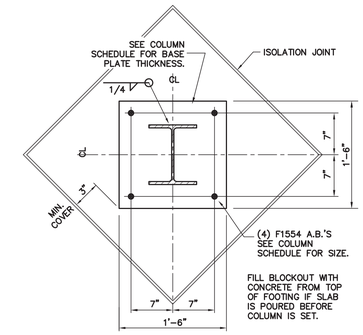

C1 – W10x33
C2 – W10x49

DETAIL 04 — 1" SCALE

PLAN @ COLUMN BASE PLATE – WIDE FLANGE

SEE 06/S2.2 FOR PLAN VIEW AT COLUMN BASE PLATES.

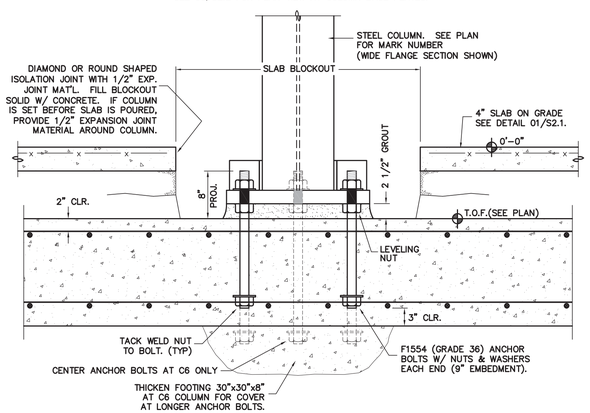

SEE FOOTING SCHEDULE FOR SIZE & REINFORCEMENT.
REINFORCING STEEL TO BE EQUALLY SPACED.

DETAIL 05 — 1" SCALE

WIDE FLANGE COLUMN SETTING DETAIL

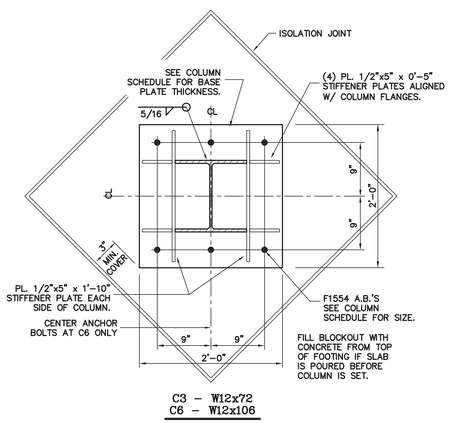

C3 – W12x72
C6 – W12x106

DETAIL 06 — 1" SCALE

PLAN @ COLUMN BASE PLATE – WIDE FLANGE

SEE 08/S2.2 FOR PLAN VIEW AT COLUMN BASE PLATES.

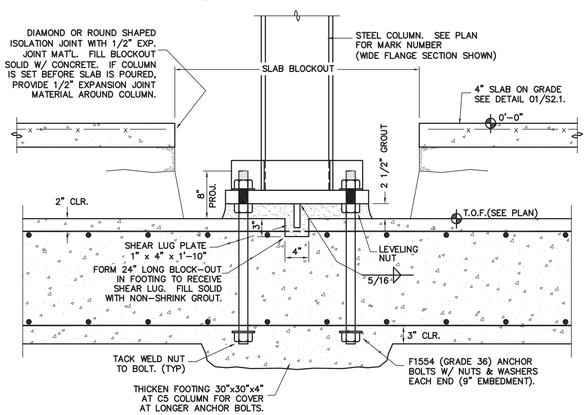

SEE FOOTING SCHEDULE FOR SIZE & REINFORCEMENT.
REINFORCING STEEL TO BE EQUALLY SPACED.

DETAIL 07 — 1" SCALE

WIDE FLANGE COLUMN SETTING DETAIL

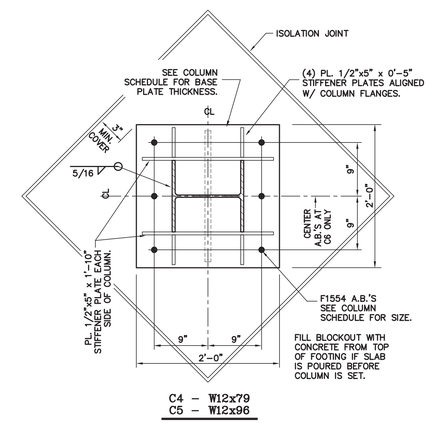

C4 – W12x79
C5 – W12x96

DETAIL 08 — 1" SCALE

PLAN @ COLUMN BASE PLATE – WIDE FLANGE

LYSAGHT & ASSOCIATES
structural engineers
120 SAINT MARY'S ST.
RALEIGH, NC 27605
PH: (919) 833-0495
FAX: (919) 833-7630
N.C. FIRM LICENSE C-0621

PRELIMINARY DO NOT USE FOR CONSTRUCTION

MAURER ARCHITECTURE
115.5 EAST HARGETT STREET, SUITE 300
RALEIGH, NORTH CAROLINA 27601
TEL. 919-829-4969 FAX. 919-829-0860

DATE	10/28/16
DR.	JES
CH.	
PROJ. #	LA-11199
REVISIONS	DATE

FOUNDATION DETAILS

S2.2

THE COMPOSITE CONCRETE SLAB IS DESIGNED AS A SIMPLE SPAN SYSTEM OVER EACH SET OF SUPPORTS, I.E. THE SLAB IS ASSUMED TO CRACK OVER THE SUPPORTS. MINOR CRACKING OF THE SLAB OVER THE SUPPORT BEAMS IS EXPECTED AND DOES NOT INDICATE A DEFICIENCY IN THE SLAB.

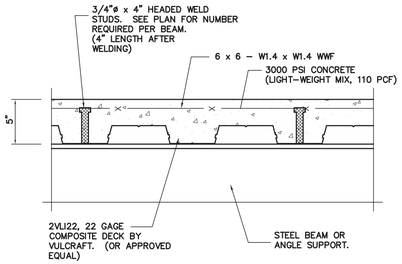

NOTES :

DECK SHALL BE GALVANIZED.

DECK SHALL BE CONTINUOUS OVER 3 OR MORE SPANS.

WELD THE DECK TO STRUCTURAL STEEL SUPPORTS WITH 5/8"ø PUDDLE WELDS SPACED 12" O.C. MAXIMUM. USE #10 TEK SIDELAP FASTENERS (OR BUTTON-PUNCHING) SPACED 3'-0" O.C.

DETAIL 01 — 1 1/2" SCALE

TYPICAL COMPOSITE FLOOR SLAB CONSTRUCTION

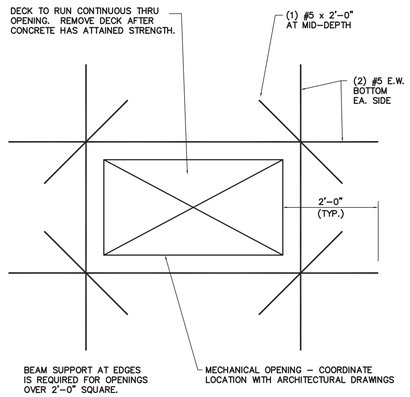

DETAIL 02 — NO SCALE

TYPICAL SLAB REINFORCEMENT AT SLAB OPENINGS (WITHOUT BEAM SUPPORTS)

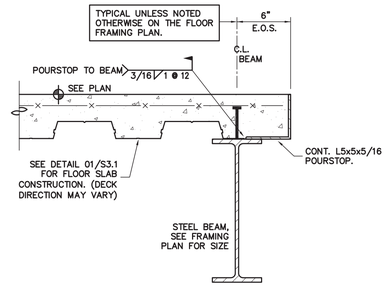

DETAIL 03 — 1 1/2" SCALE

TYPICAL POUR STOP DETAIL AT STAIRWELL

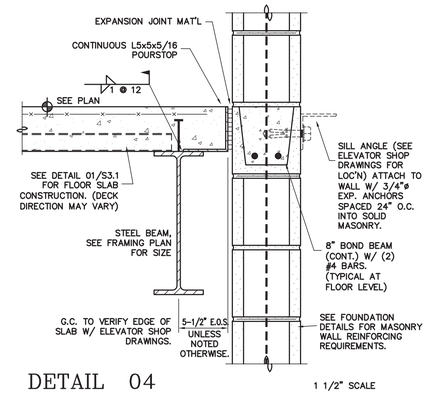

DETAIL 04 — 1 1/2" SCALE

FLOOR FRAMING SECTION AT ELEVATOR WALLS

SUPPORTED BEAM SIZE	ROWS OF BOLTS
W8, W10, W12	2
W14	3
W16, W18	4
W21	5

STEEL FABRICATOR NOTE: ALTERNATE CONNECTION TYPES MUST BE APPROVED IN WRITING BY THE STRUCTURAL ENGINEER PRIOR TO SUBMITTAL OF SHOP DRAWINGS.

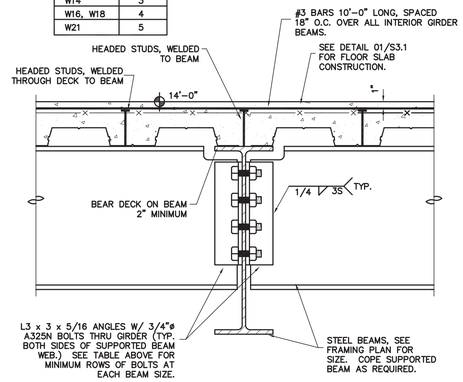

DETAIL 05 — 1 1/2" SCALE

SECTION AT COMPOSITE GIRDER (TYPICAL BEAM TO BEAM CONNECTION)

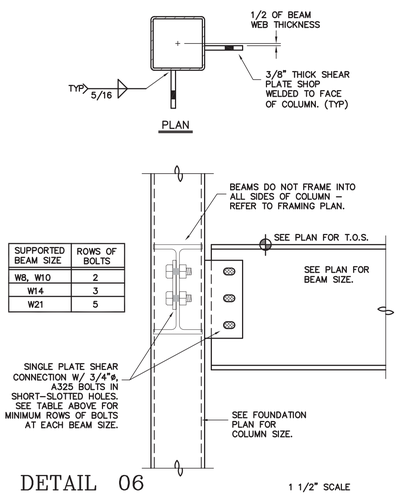

SUPPORTED BEAM SIZE	ROWS OF BOLTS
W8, W10	2
W14	3
W21	5

DETAIL 06 — 1 1/2" SCALE

TYPICAL BEAM TO TUBE COLUMN SHEAR CONNECTION

SUPPORTED BEAM SIZE	ROWS OF BOLTS
W10	2
W12, W14	3
W16, W18	4
W21	5
W24	6
W27	6

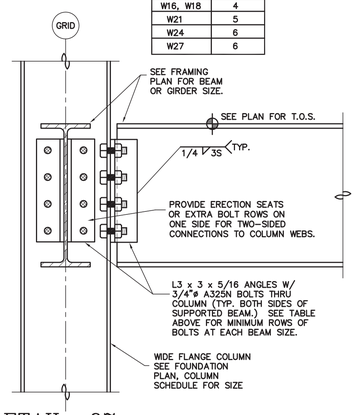

DETAIL 07 — 1 1/2" SCALE

FLOOR BEAM TO COLUMN SHEAR CONNECTION

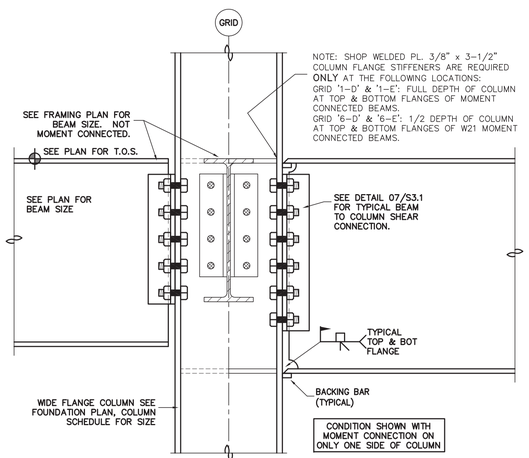

DETAIL 08 — 1 1/2" SCALE

TYPICAL STEEL BEAM TO COLUMN WIND MOMENT CONNECTIONS

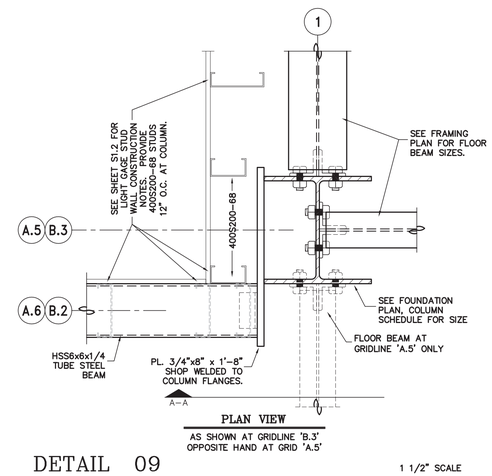

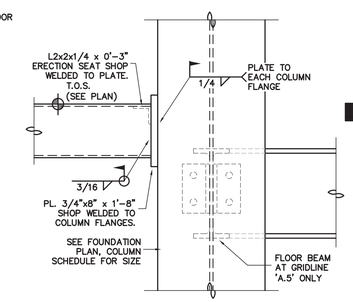

DETAIL 09 — 1 1/2" SCALE

TUBE STEEL BEAM CONNECTION TO COLUMN AT STAIR 104 (STEEL ONLY SHOWN)

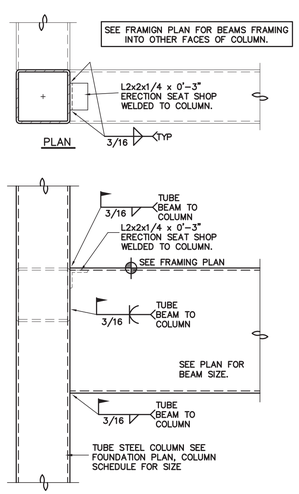

DETAIL 10 — 1 1/2" SCALE

TUBE STEEL BEAM TO COLUMN CONNECTION

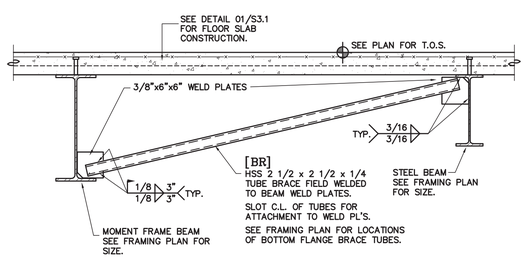

DETAIL 11 — 3/4" SCALE

MOMENT FRAME FLOOR BEAM BOTTOM FLANGE BRACING DETAIL

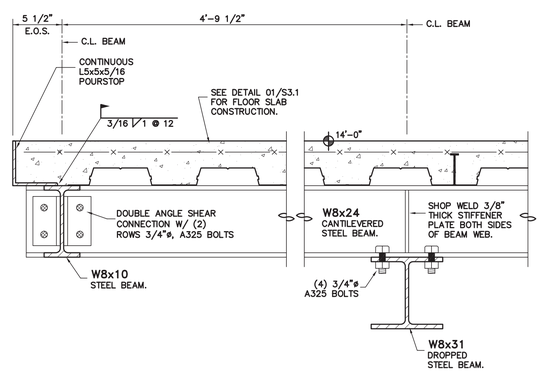

DETAIL 12 — 1 1/2" SCALE

2ND FLOOR FRAMING SECTION AT STAIR 103

LYSAGHT & ASSOCIATES
structural engineers
120 SAINT MARY'S ST.
RALEIGH, NC 27605
PH: (919) 833-0495
FAX: (919) 833-7630
N.C. FIRM LICENSE C-0621

PRELIMINARY DO NOT USE FOR CONSTRUCTION

MAURER ARCHITECTURE
115.5 EAST HARGETT STREET, SUITE 300
RALEIGH, NORTH CAROLINA 27601
TEL. 919-829-4969 FAX. 919-829-0860

DATE	10/28/16
DR.	JES
CH.	
PROJ. #	LA-11199
REVISIONS	DATE

FLOOR FRAMING DETAILS

S3.1

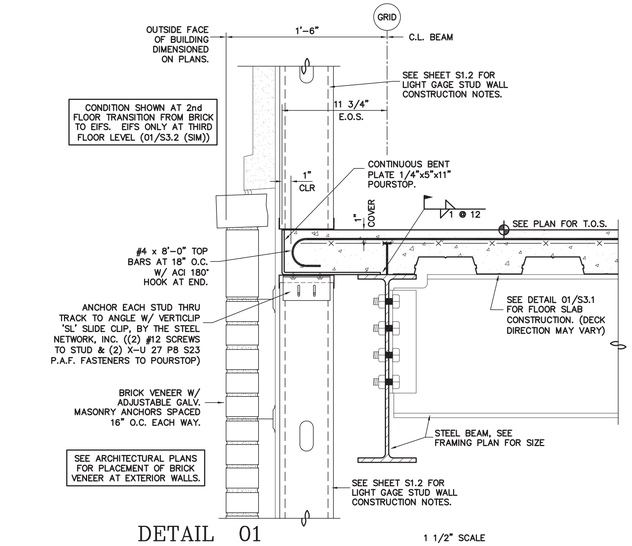

DETAIL 01 — 1 1/2" SCALE

FLOOR FRAMING SECTION AT EXTERIOR WALL

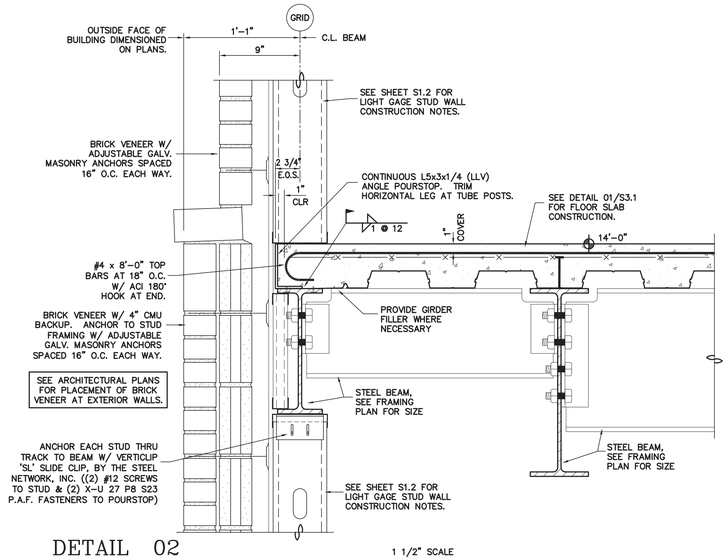

DETAIL 02 — 1 1/2" SCALE

FLOOR FRAMING SECTION AT EXTERIOR WALL

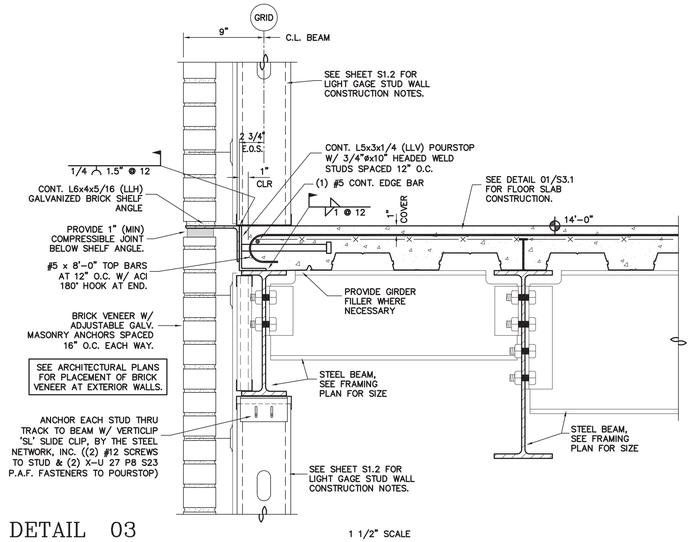

DETAIL 03 — 1 1/2" SCALE

3RD FLOOR FRAMING SECTION AT EXTERIOR WALL W/ BRICK RELIEF ANGLE

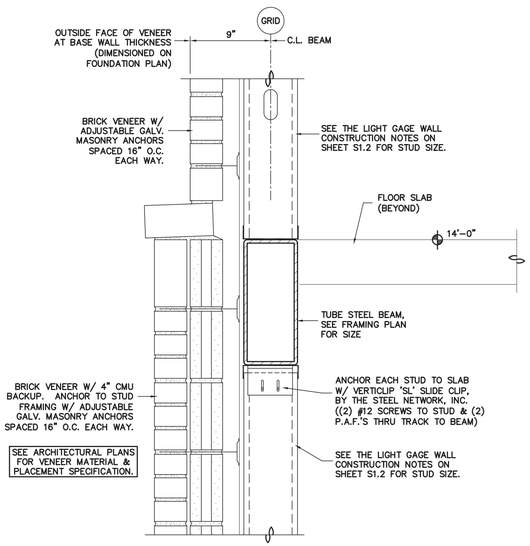

DETAIL 04 — 1 1/2" SCALE

2ND FLOOR EXTERIOR WALL SECTION AT STAIR 104

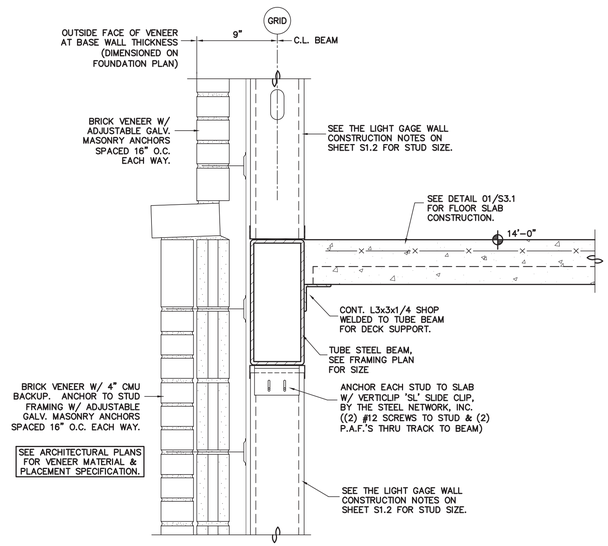

DETAIL 05 — 1 1/2" SCALE

2ND FLOOR FRAMING SECTION ADJACENT TO STAIR 104

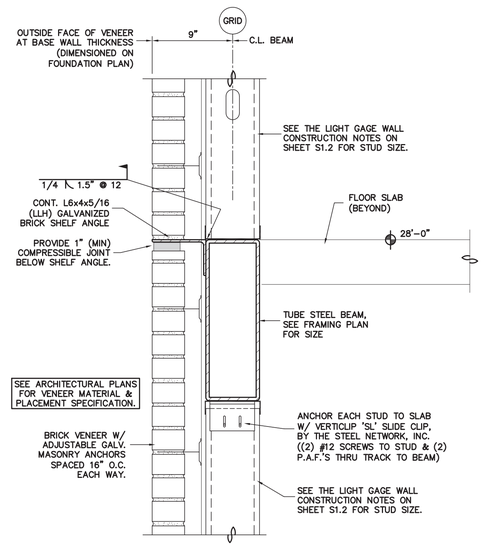

DETAIL 06 — 1 1/2" SCALE

3RD FLOOR EXTERIOR WALL SECTION AT STAIR 104

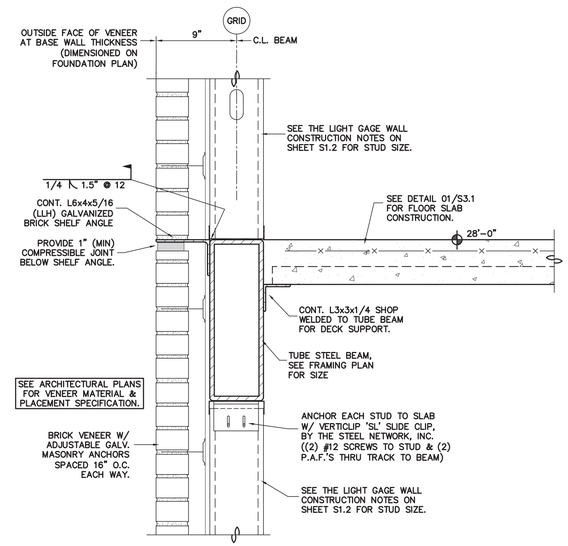

DETAIL 07 — 1 1/2" SCALE

3RD FLOOR FRAMING SECTION ADJACENT TO STAIR 104

LYSAGHT & ASSOCIATES
structural engineers
120 SAINT MARY'S ST.
RALEIGH, NC 27605
PH: (919) 833-0495
FAX: (919) 833-7630
N.C. FIRM LICENSE C-0621

PRELIMINARY DO NOT USE FOR CONSTRUCTION

MAURER ARCHITECTURE
115.5 EAST HARGETT STREET, SUITE 300
RALEIGH, NORTH CAROLINA 27601
TEL. 919-829-4969 FAX. 919-829-0860

DATE	10/28/16
DR.	JES
CH.	
PROJ. #	LA-11199
REVISIONS	DATE

FLOOR FRAMING DETAILS

S3.2

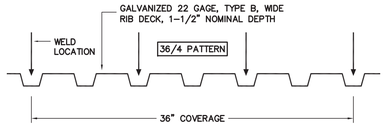

ROOF DECK DIAPHRAGM TO CONFORM TO VULCRAFT "DIAPHRAGM SHEAR STRENGTH AND STIFFNESS" TABLES.

WELD PATTERN TO BE 36/4. FOUR PUDDLE WELDS AT EACH SUPPORT AND (1) #10 TEK SCREW SIDELAP FASTENER @ MID-POINT OF DECK SPANS.

FOR DECK TYPE B, PUDDLE WELDS SHALL HAVE A FUSION AREA TO SUPPORTING MEMBERS NOT LESS THAN 3/8" BY 1".

USE 12" MAXIMUM WELD SPACING AROUND PERIMETER OF BUILDING AT HSS TUBE BEAMS.

ALL ROOF DECK WELDS SHALL BE PAINTED WITH A ZINC RICH PRIMER

DETAIL 01

1 1/2" SCALE

CANOPY ROOF DECK WELD PATTERN

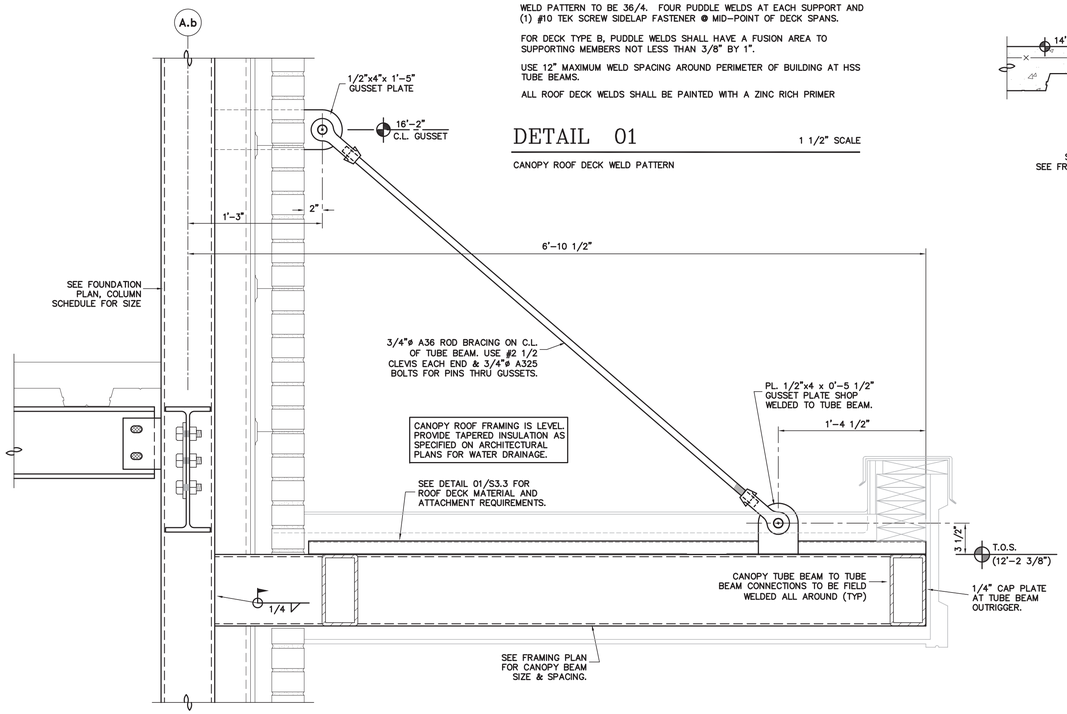

DETAIL 03

1 1/2" SCALE

ENTRY CANOPY TUBE OUTRIGGER BEAM TO COLUMN CONNECTION

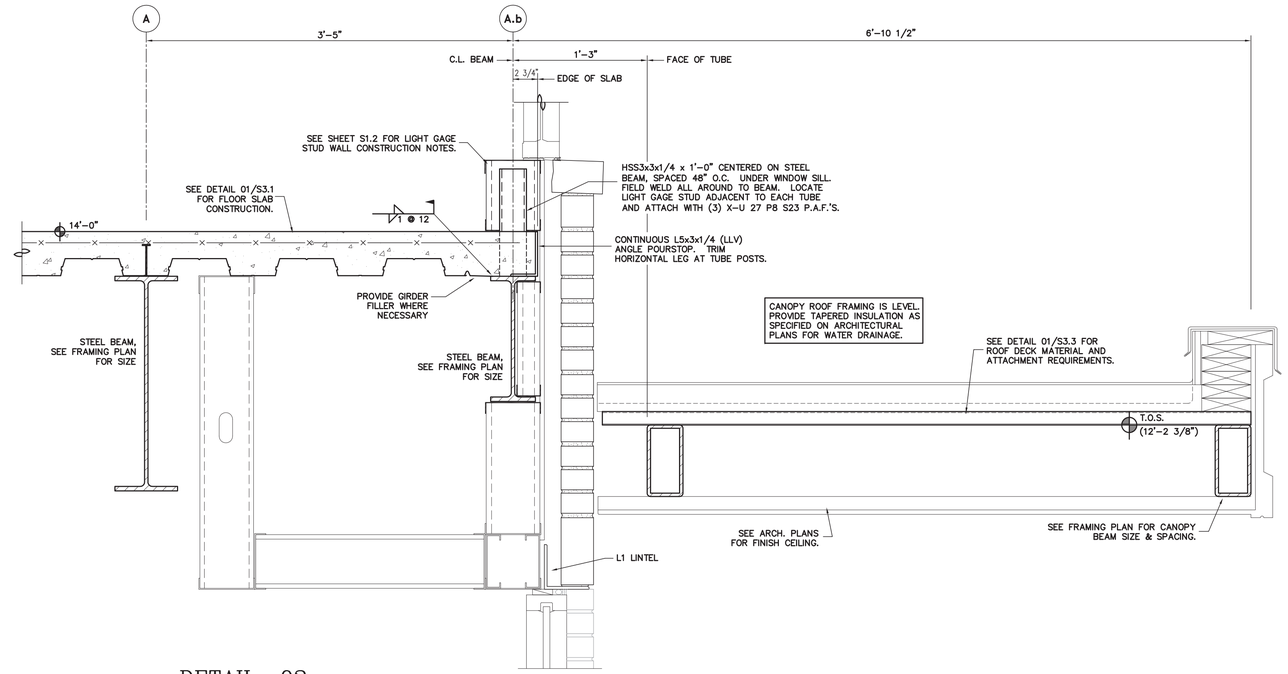

DETAIL 02

1 1/2" SCALE

FLOOR & CANOPY FRAMING SECTION OVER ENTRY

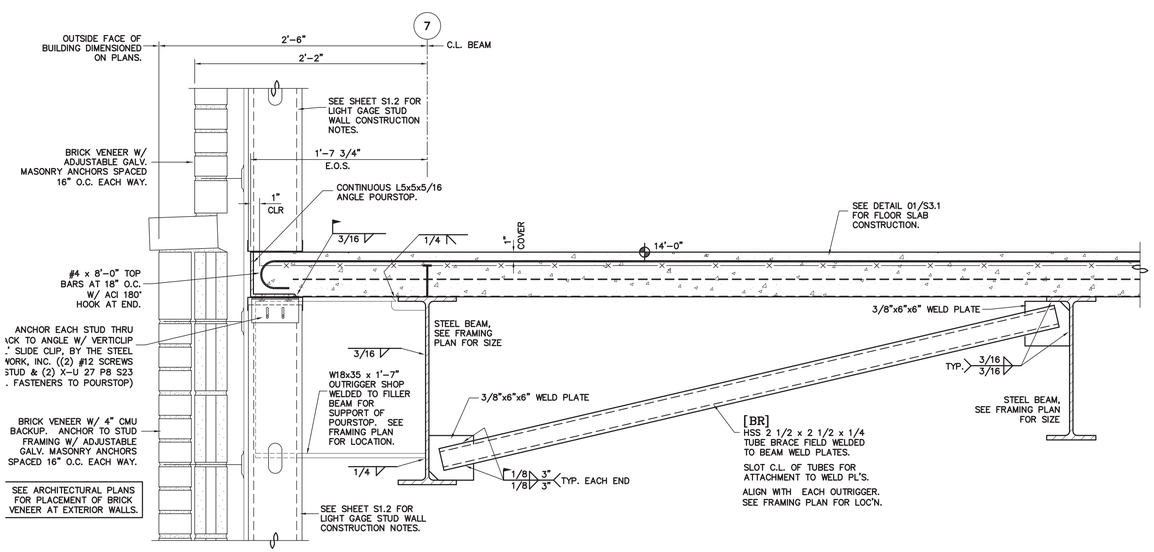

DETAIL 04

1 1/2" SCALE

2ND FLOOR FRAMING SECTION AT EXTERIOR WALL

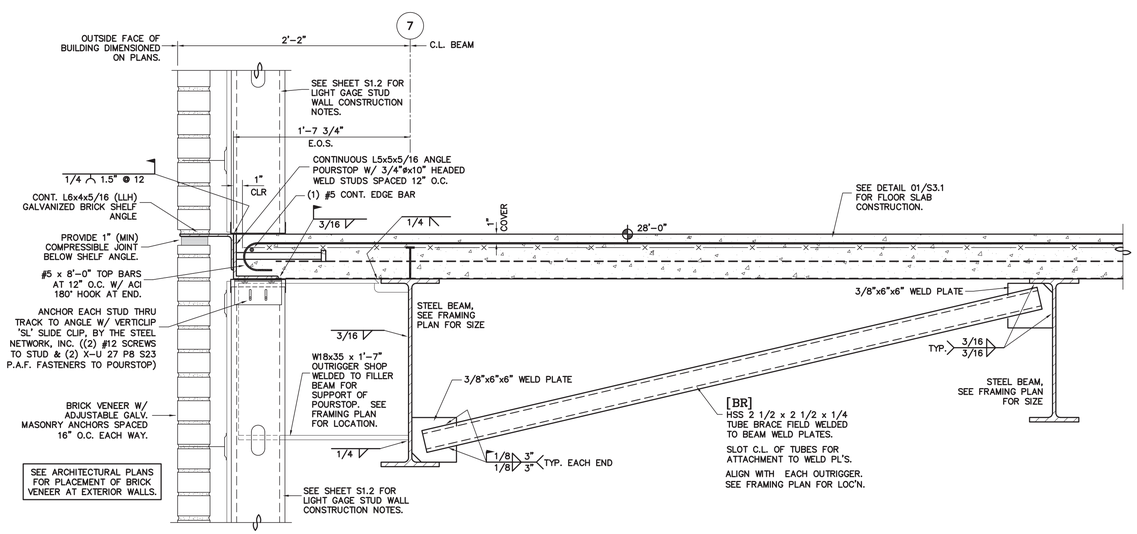

DETAIL 05

1 1/2" SCALE

3RD FLOOR FRAMING SECTION AT EXTERIOR WALL

LYSAGHT & ASSOCIATES
structural engineers
120 SAINT MARY'S ST.
RALEIGH, NC 27605
PH: (919) 833-0495
FAX: (919) 833-7630
N.C. FIRM LICENSE C-0621

PRELIMINARY DO NOT USE FOR CONSTRUCTION

MAURER ARCHITECTURE
115.5 EAST HARGETT STREET, SUITE 300
RALEIGH, NORTH CAROLINA 27601
TEL. 919-829-4969 FAX. 919-829-0860

DATE	10/28/16
DR.	JES
CH.	
PROJ. #	LA-11199
REVISIONS	DATE

FLOOR FRAMING DETAILS

S3.3

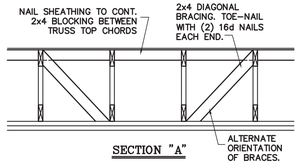

SECTION "A"

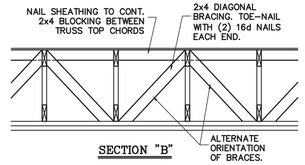

SECTION "B"

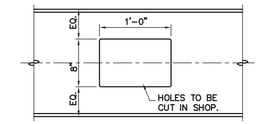

INTERIOR GIRDER BEAM WEB OPENINGS
(AT W18x50 & W16x36 BEAMS ONLY)

PLYWOOD SHEATHING INSTALLATION NOTES :

THE ROOF SHEATHING SHALL BE 5/8" THICK, 40/20 APA RATED CDX PLYWOOD. FASTEN SHEATHING TO ROOF TRUSSES AND OTHER SUPPORTS WITH 10d NAILS SPACED 6" O.C. AT PANEL EDGES AND AT 12" O.C. AT INTERMEDIATE SUPPORT LOCATIONS.

ORIENT PLYWOOD SHEATHING PANELS AS SHOWN BELOW:

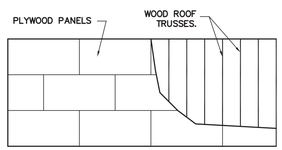

DETAIL 01 NO SCALE

ROOF DECK ATTACHMENT

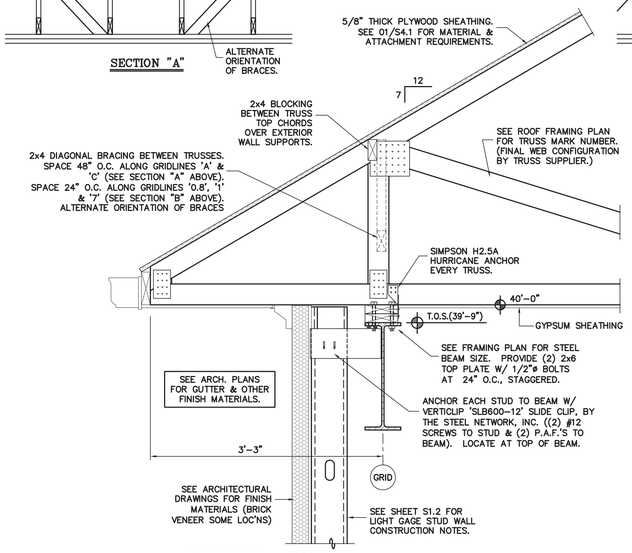

DETAIL 02 1" SCALE

ROOF TRUSS BEARING AT EXTERIOR WALLS

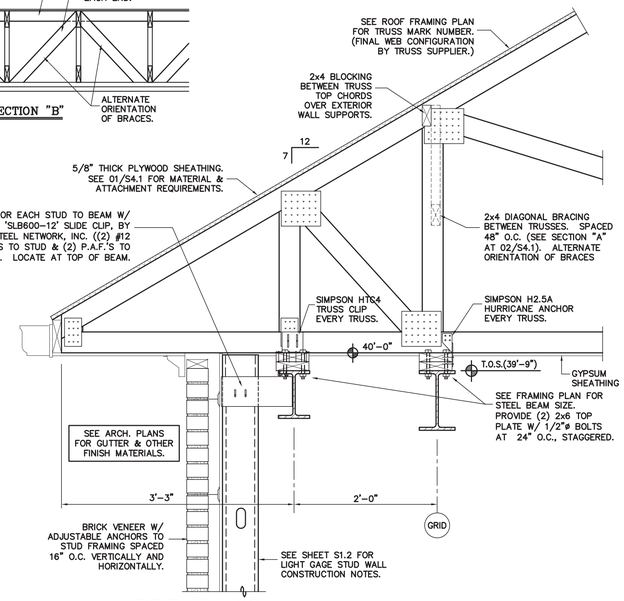

DETAIL 03 1" SCALE

ROOF TRUSS BEARING AT "BUMPED-OUT" EXTERIOR WALLS

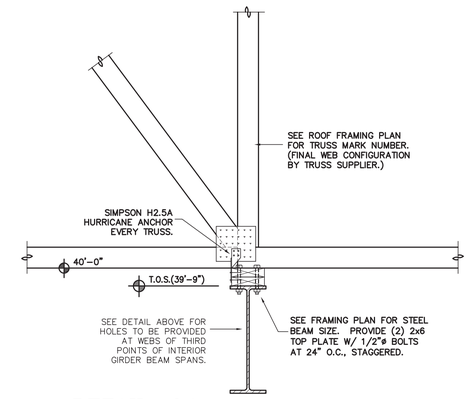

DETAIL 04 1" SCALE

ROOF TRUSS SUPPORT AT INTERIOR STEEL BEAMS

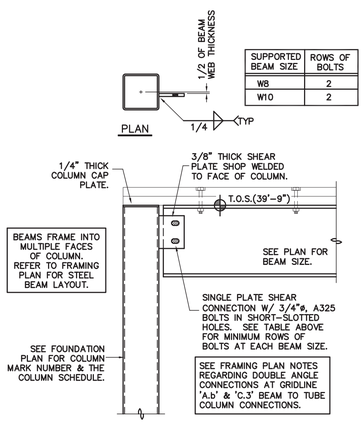

SUPPORTED BEAM SIZE	ROWS OF BOLTS
W8	2
W10	2

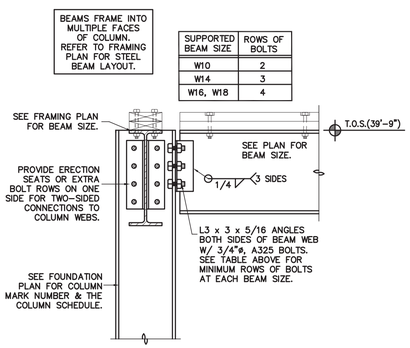

SUPPORTED BEAM SIZE	ROWS OF BOLTS
W10	2
W14	3
W16, W18	4

DETAIL 05 1" SCALE

TYPICAL STEEL BEAM TO COLUMN SHEAR CONNECTIONS

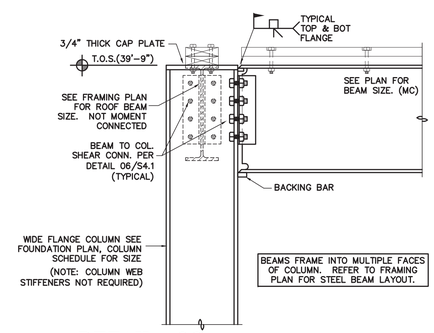

DETAIL 06 1" SCALE

STEEL BEAM TO COLUMN WIND MOMENT CONNECTION

SUPPORTED BEAM SIZE	ROWS OF BOLTS
W8	2
W10	2

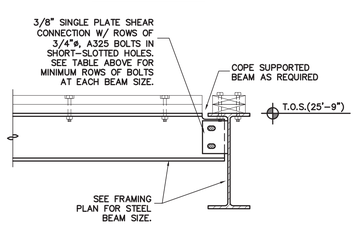

DETAIL 07 1" SCALE

TYPICAL ROOF STEEL BEAM TO BEAM CONNECTION

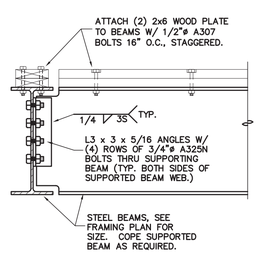

DETAIL 08 1" SCALE

STEEL BEAM TO BEAM CONNECTION AT GRID '1-B'

LYSAGHT & ASSOCIATES
structural engineers
120 SAINT MARY'S ST.
RALEIGH, NC 27605
PH: (919) 833-0495
FAX: (919) 833-7630
N.C. FIRM LICENSE C-0621

PRELIMINARY DO NOT USE FOR CONSTRUCTION

MAURER ARCHITECTURE
115.5 EAST HARGETT STREET, SUITE 300
RALEIGH, NORTH CAROLINA 27601
TEL. 919-829-4969 FAX. 919-829-0860

DATE	10/28/16
DR.	JES
CH.	
PROJ. #	LA-11199
REVISIONS	DATE

ROOF FRAMING DETAILS

S4.1

PLUMBING KEY NOTES

- 1.1 2" COLD WATER PIPE BELOW FINISHED GRADE. PLUMBING CONTRACTOR'S WORK BEGINS 5'-0" OUTSIDE BUILDING. SEE SITE PLAN FOR CONTINUATION AND LOCATION OF WATER METER AND BACKFLOW PREVENTOR.
- 1.2 MAIN SHUT OFF VALVE IN VALVE BOX.
- 1.3 1 1/4" COLD WATER RISER UP TO SECOND FLOOR. 1" COLD WATER RISER UP TO THIRD FLOOR.
- 1.4 STUB AND CAP 1" COLD WATER PIPE AT CEILING FOR FUTURE USE
- 1.5 WATER PIPING ABOVE FINISHED CEILING. COORDINATE LOCATION WITH MECHANICAL AND ELECTRICAL CONTRACTORS.
- 2.1 4" SANITARY SEWER PIPE BELOW FINISHED GRADE. PLUMBING CONTRACTOR'S WORK EXTENDS 5'-0" OUTSIDE BUILDING. SEE SITE PLAN FOR CONTINUATION.
- 2.2 INVERT ELEVATION IS TO BE 3.5' BELOW FINISHED FLOOR.
- 2.3 4" WASTE STACK DOWN FROM SECOND FLOOR.
- 2.4 3" VENT STACK UP TO SECOND FLOOR.
- 2.5 2" CONDENSATE STACK DOWN FROM SECOND FLOOR.
- 2.6 SANITARY SEWER PIPING BELOW FINISHED FLOOR.
- 2.7 CONDENSATE PIPING ROUTED UP HIGH AT STRUCTURE. COORDINATE LOCATION WITH MECHANICAL AND ELECTRICAL CONTRACTORS.
- 2.8 DROP DOWN IN WALL AND SPILL ON GRADE.
- 3.1 4" ROOF DRAIN LEADER DOWN FROM SECOND FLOOR.
- 3.2 ROOF DRAIN LEADER ROUTED UP HIGH AT STRUCTURE. COORDINATE LOCATION WITH MECHANICAL AND ELECTRICAL CONTRACTORS.
- 3.3 DROP DOWN IN WALL AND SPILL ON GRADE.
- 3.4 6" OVERFLOW DRAIN LEADER DOWN FROM SECOND FLOOR.
- 3.5 DOWNSPOUT NOZZLE (DN-1). COORDINATE MOUNTING HEIGHT WITH ARCHITECT.
- 4.1 SUMP PUMP (P-1) LOCATED IN SUMP PIT. SUMP PIT BY GENERAL CONTRACTOR.
- 4.2 2" FORCED MAIN LOCATED BELOW FINISHED GRADE.
- 4.3 300 GALLON PRECAST CONCRETE HOLDING TANK BELOW FINISHED GRADE.
- 5.1 ELECTRICAL EQUIPMENT BY ELECTRICAL CONTRACTOR.

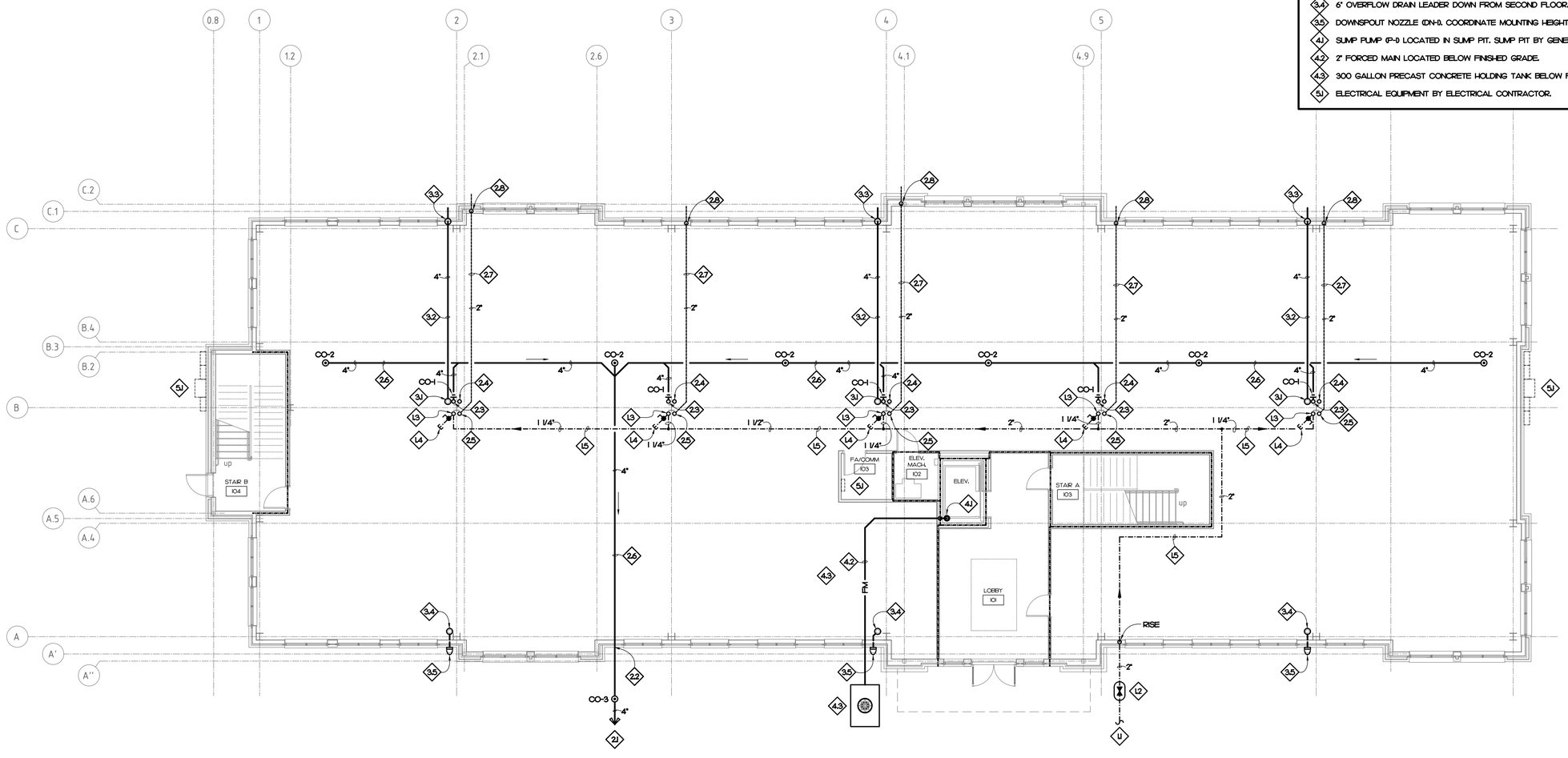

1 P1.1 1ST FLOOR PLUMBING PLAN

SCALE: 1/8" = 1'-0"

New Shell Building
Heritage Park West
3125 Rogers Road
Wake Forest, North Carolina

ATLANTEC ENGINEERS, PA
323 BLUE RIDGE ROAD, SUITE 103
RALEIGH, NC 27612
(919) 571-111

805 ST. JAMES PLACE
KENSTON, NC 28504
(252) 527-5506

16227

PROGRESS DRAWING
NOT RELEASED FOR CONSTRUCTION

MAURER ARCHITECTURE
115.5 EAST HARGETT STREET, SUITE 300
RALEIGH, NC 27601
TEL. 919-829-4969 FAX. 919-829-0860

DATE	12.02.16
DR.	DRD
CH.	JBD
PROJ. #	16096
REVISIONS	DATE

PLUMBING PLAN
1ST FLOOR

P1.1

16227

PLUMBING KEY NOTES

- L1 — 1 1/4" COLD WATER RISER UP FROM FIRST FLOOR. 1" COLD WATER RISER UP TO THIRD FLOOR.
- L2 — STUB AND CAP 1" COLD WATER PIPE AT CEILING FOR FUTURE USE
- 2.1 — 4" WASTE STACK DOWN FROM THIRD FLOOR. 4" WASTE STACK DOWN TO FIRST FLOOR.
- 2.2 — 3" VENT STACK UP FROM FIRST FLOOR. 3" VENT STACK UP TO THIRD FLOOR.
- 2.3 — 2" CONDENSATE STACK DOWN FROM THIRD FLOOR. 2" CONDENSATE STACK DOWN TO FIRST FLOOR.
- 3.1 — 4" ROOF DRAIN LEADER DOWN FROM THIRD FLOOR. 4" ROOF DRAIN LEADER DOWN TO FIRST FLOOR.
- 3.2 — 6" OVERFLOW DRAIN LEADER DOWN FROM THIRD FLOOR. 6" OVERFLOW DRAIN LEADER DOWN TO FIRST FLOOR.
- 4.1 — ELECTRICAL EQUIPMENT BY ELECTRICAL CONTRACTOR.

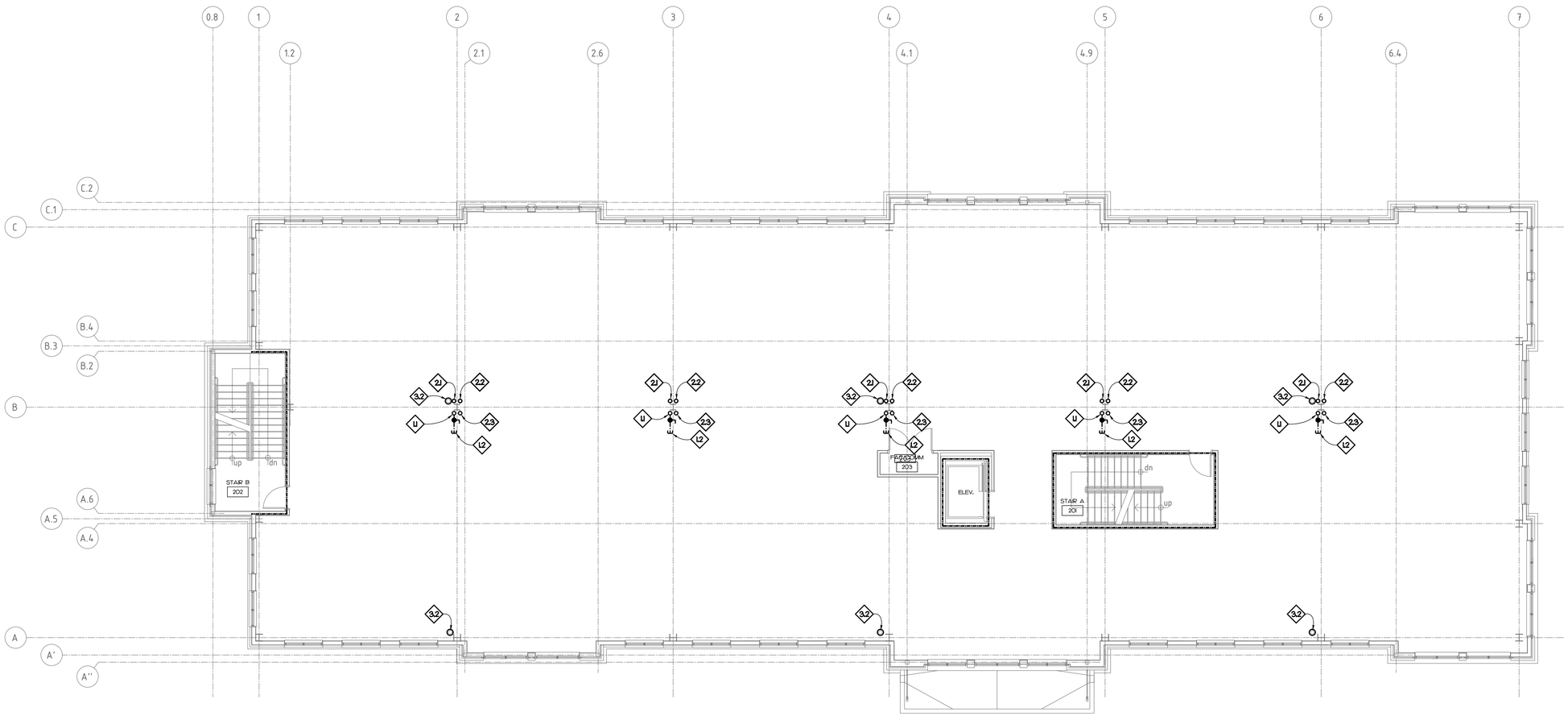

1 / P1.2 2ND FLOOR PLUMBING PLAN

SCALE: 1/8" = 1'-0"

New Shell Building
Heritage Park West
3125 Rogers Road
Wake Forest, North Carolina

ATLANTEC ENGINEERS, PA
323 BLUE RIDGE ROAD, SUITE 13
RALEIGH, NC 27612
(919) 571-111
805 ST. JAMES PLACE
HOLLY SPRINGS, NC 27540
(919) 557-5556
16227

PROGRESS DRAWING
NOT RELEASED FOR CONSTRUCTION

MAURER ARCHITECTURE
115.5 EAST HARGETT STREET, SUITE 300
RALEIGH, NC 27601
TEL. 919-829-4969 FAX. 919-829-0860

DATE	12.02.16
DR.	DRD
CH.	JBD
PROJ. #	16096
REVISIONS	DATE

PLUMBING PLAN
2ND FLOOR

P1.2

16227

PLUMBING KEY NOTES

- L1 1" COLD WATER RISER UP FROM SECOND FLOOR.
- L2 STUB AND CAP 1" COLD WATER PIPE AT CEILING FOR FUTURE USE
- 2.1 4" WASTE STACK DOWN TO SECOND FLOOR.
- 2.2 3" VENT STACK UP FROM SECOND FLOOR. CONTINUE UP THROUGH ROOF.
- 2.3 2" CONDENSATE STACK DOWN TO SECOND FLOOR.
- 3.1 3" ROOF DRAIN LEADER DOWN FROM ROOF.
- 3.2 4" ROOF DRAIN LEADER AT CEILING. DROP DOWN TO SECOND FLOOR.
- 3.3 4" OVERFLOW DRAIN LEADER DOWN FROM ROOF.
- 3.4 6" OVERFLOW DRAIN LEADER AT CEILING.
- 3.5 6" OVERFLOW DRAIN LEADER DOWN TO SECOND FLOOR.
- 4.1 ELECTRICAL EQUIPMENT BY ELECTRICAL CONTRACTOR.

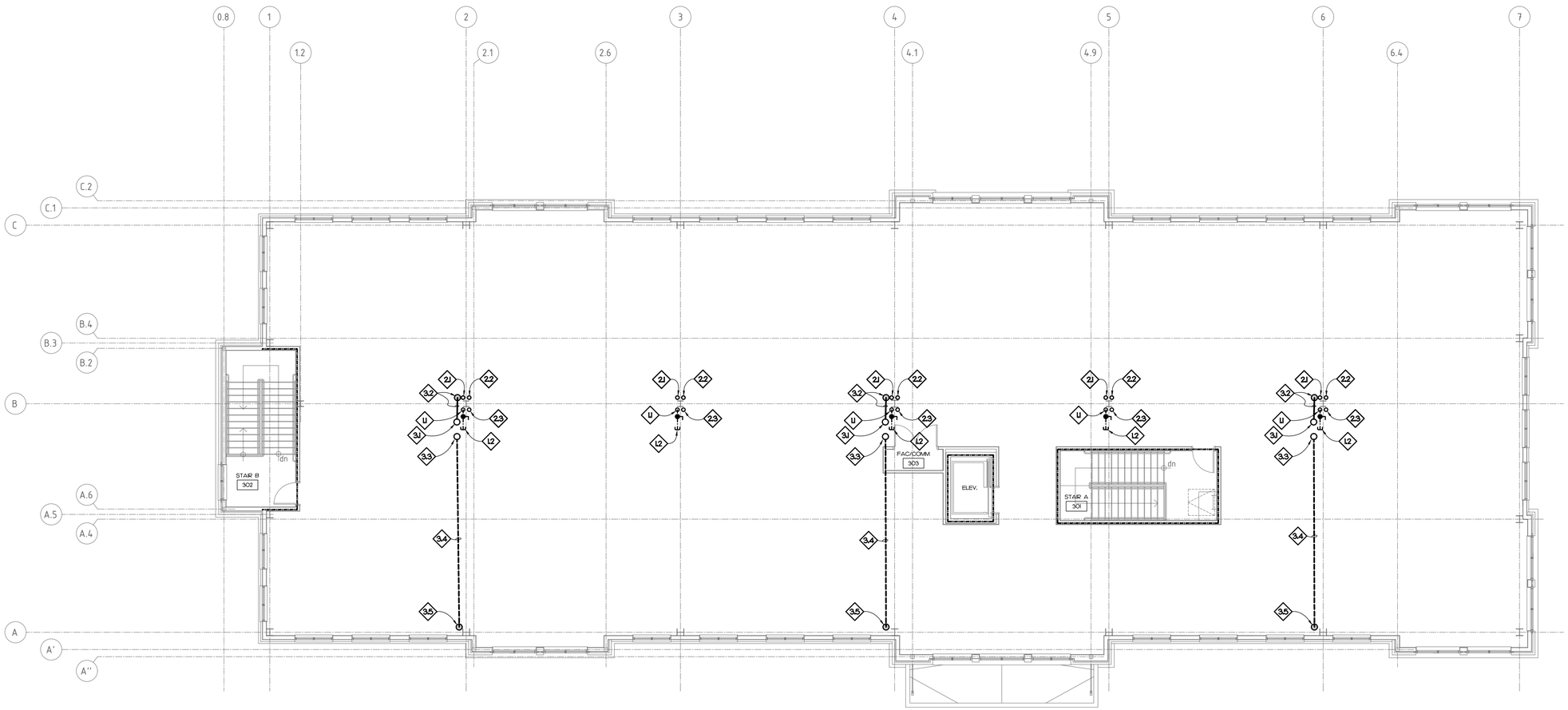

1 P1.3 3RD FLOOR PLUMBING PLAN

SCALE: 1/8" = 1'-0"

16227

New Shell Building
Heritage Park West
3125 Rogers Road
Wake Forest, North Carolina

ATLANTEC ENGINEERS, PA
323 BLUE RIDGE ROAD, SUITE 13
RALEIGH, NC 27612
(919) 571-111
805 ST. JAMES PLACE
HOLLY SPRINGS, NC 27540
(919) 557-5556
16227

PROGRESS DRAWING
NOT RELEASED FOR CONSTRUCTION

MAURER ARCHITECTURE
115.5 EAST HARGETT STREET, SUITE 300
RALEIGH, NC 27601
TEL. 919-829-4969 FAX. 919-829-0860

DATE	12.02.16
DR.	DRD
CH.	JBD
PROJ. #	16096
REVISIONS	DATE

PLUMBING PLAN
3RD FLOOR

P1.3

PLUMBING KEY NOTES

1. 3" VENT THROUGH ROOF UP FROM THIRD FLOOR.
2.1 ROOF DRAIN (RD-1) 1369 SQUARE FEET. ROUTE 3" ROOF DRAIN LEADER DOWN TO THIRD FLOOR.
2.2 ROOF DRAIN (RD-1) 1467 SQUARE FEET. ROUTE 3" ROOF DRAIN LEADER DOWN TO THIRD FLOOR.
2.3 ROOF DRAIN (RD-1) 1726 SQUARE FEET. ROUTE 3" ROOF DRAIN LEADER DOWN TO THIRD FLOOR.
2.4 OVERFLOW DRAIN (OD-1) 1369 SQUARE FEET. ROUTE 4" OVERFLOW DRAIN LEADER DOWN TO THIRD FLOOR.
2.5 OVERFLOW DRAIN (OD-1) 1467 SQUARE FEET. ROUTE 4" OVERFLOW DRAIN LEADER DOWN TO THIRD FLOOR.
2.6 OVERFLOW DRAIN (OD-1) 1726 SQUARE FEET. ROUTE 4" OVERFLOW DRAIN LEADER DOWN TO THIRD FLOOR.

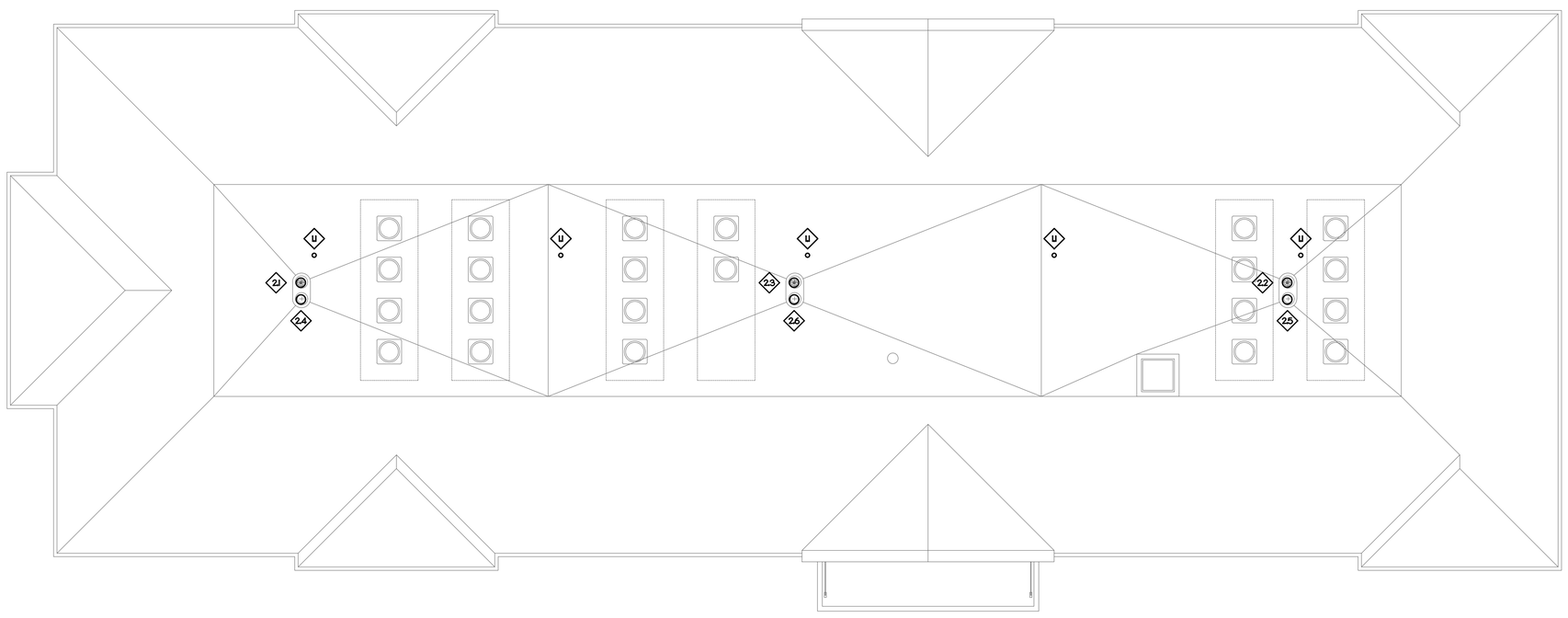

1 P1.4 ROOFTOP PLUMBING PLAN
SCALE: 1/8" = 1'-0"

16227

New Shell Building
Heritage Park West
3125 Rogers Road
Wake Forest, North Carolina

ATLANTEC ENGINEERS, PA
323 BLUE RIDGE ROAD, SUITE 13
RALEIGH, NC 27612
(919) 571-111
805 ST. JAMES PLACE
HOUSTON, NC 28504
(252) 527-3336
16227

PROGRESS DRAWING
NOT RELEASED FOR CONSTRUCTION

MAURER ARCHITECTURE
115.5 EAST HARGETT STREET, SUITE 300
RALEIGH, NC 27601
TEL. 919-829-4969 FAX. 919-829-0860

DATE	12.02.16
DR.	DRD
CH.	JBD
PROJ. #	16096
REVISIONS	DATE

PLUMBING PLAN
ROOFTOP

P1.4

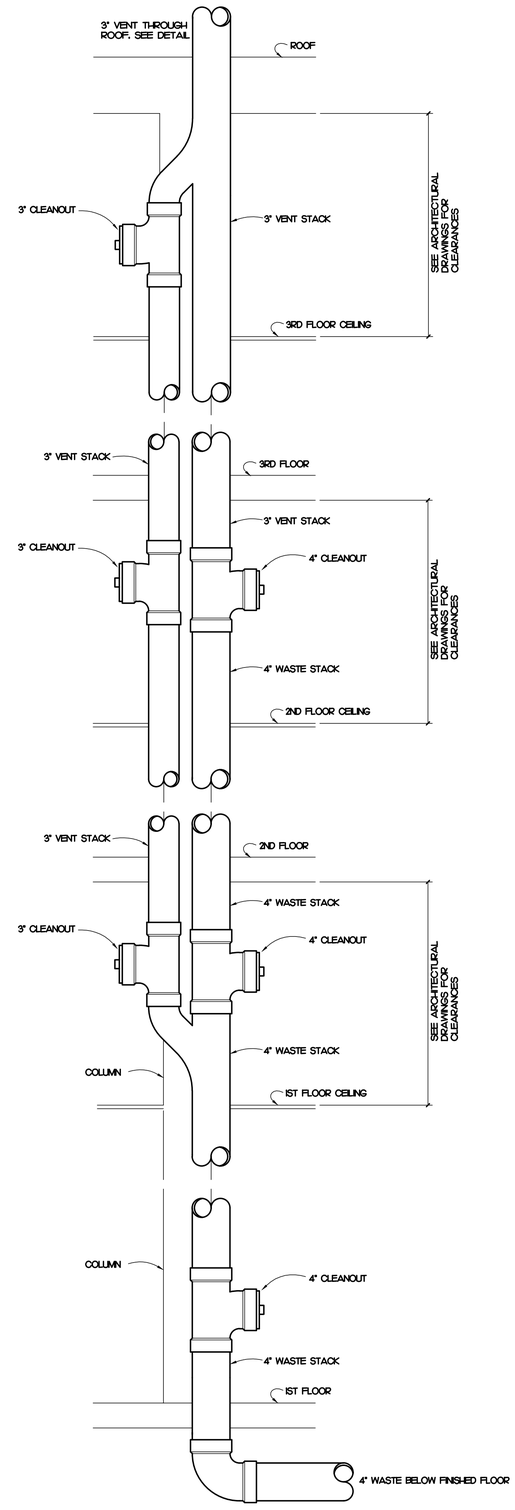

7 P2.1 WASTE/VENT STACK DETAIL

NOT TO SCALE

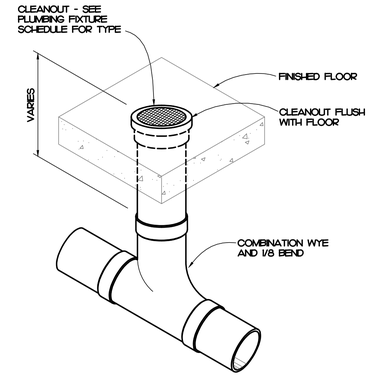

4 P2.1 FLOOR CLEANOUT DETAIL

NOT TO SCALE

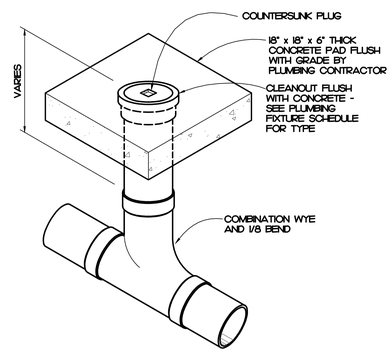

NOTE: SEE SITE AND/OR UTILITY PLAN FOR LOCATION AND FINISH GRADE ELEVATION

5 P2.1 EXTERIOR CLEANOUT DETAIL

NOT TO SCALE

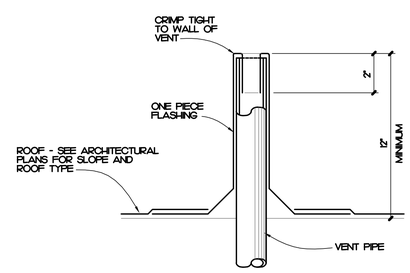

6 P2.1 VENT THROUGH ROOF DETAIL

NOT TO SCALE

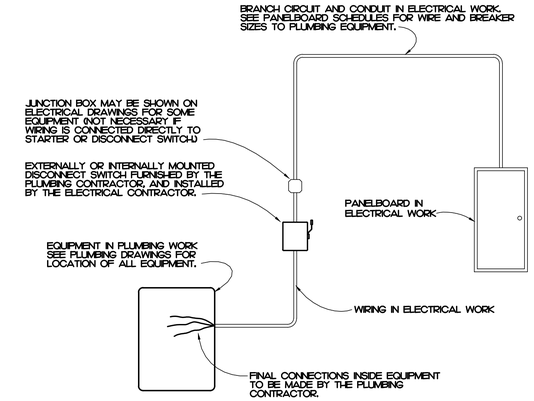

1 P2.1 ELECTRICAL WIRING DETAIL

NOT TO SCALE

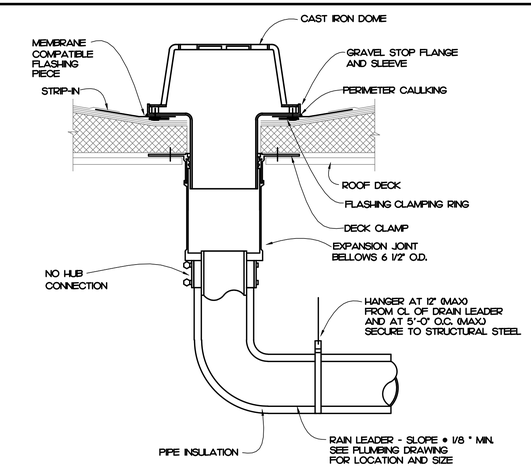

2 P2.1 ROOF DRAIN DETAIL

NOT TO SCALE

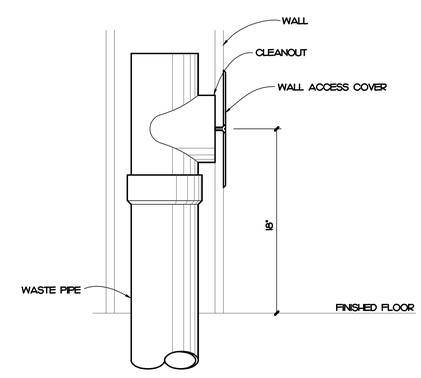

3 P2.1 WALL CLEANOUT DETAIL

NOT TO SCALE

New Shell Building
Heritage Park West
3125 Rogers Road
Wake Forest, North Carolina

ATLANTEC ENGINEERS, PA
3221 BLUE RIDGE ROAD, SUITE 113
RALEIGH, NC 27612
(919) 571-111
1505 ST. JAMES PLACE
HOUSTON, NC 28504
(228) 327-3336
16227

PROGRESS DRAWING
NOT RELEASED FOR CONSTRUCTION

MAURER ARCHITECTURE
115.5 EAST HARGETT STREET, SUITE 300
RALEIGH, NC 27601
TEL. 919-829-4969 FAX. 919-829-0860

DATE	12.02.16
DR.	DRD
CH.	JBD
PROJ. #	16096
REVISIONS	DATE

PLUMBING DETAILS

P2.1

16227

PLUMBING FIXTURE SCHEDULE

SYMBOL / IMAGE	DESCRIPTION	3 - EQUALS						PIPING CONNECTIONS		
		MANUFACTURER	MODEL NUMBER	MANUFACTURER	MODEL NUMBER	MANUFACTURER	MODEL NUMBER	COLD WATER	HOT WATER	SANITARY SEWER
CO-1	WALL CLEANOUT	ZURN	CO2413-PVC	MIFAB		JR SMITH		-	-	SEE PLUMB. DRAWINGS
	ACCESS COVER	ZURN	CO2530-SS7	MIFAB		JR SMITH				
	PVC CLEANOUT BODY AND PLUG TO BE GAS AND WATER TIGHT. PLUG TO HAVE A BRASS THREADED INSERT TO RECEIVE SECURING SCREW FOR STAINLESS STEEL ROUND ACCESS COVER.									
CO-2	FLOOR CLEANOUT	ZURN	CO2449	MIFAB		JR SMITH		-	-	SEE PLUMB. DRAWINGS
	PVC CLEANOUT WITH AND ADJUSTABLE PVC RISER, NICKEL BRONZE FRAME AND COVER, AND AN ABS TAPER THREADED PLUG. CLEANOUT TO BE GAS AND WATERTIGHT.									
CO-3	EXTERIOR CLEANOUT	ZURN	Z-1449-BP	MIFAB	C1220	JR SMITH	4283	-	-	SEE PLUMB. DRAWINGS
	CLEANOUT FERRULE WITH CAST IRON BODY, WITH GAS AND WATERTIGHT ABS COUNTERSUNK PLUG, MOUNT IN CONCRETE.									
⚡ P-1	SUMP PUMP	ZOELLER	940-0007					-	-	-
	ZOELLER OIL SMART SYSTEM INCLUDES: SUMP PUMP, PUMP SWITCH, SENSOR, AND ALARM. SUMP PUMP, 1/2 HP, 120 VOLT, SINGLE PHASE, 52 GPM @ 20' HEAD. PROVIDE WITH CHECK VALVE AND DISCONNECT, WIRING BY LICENSED ELECTRICAL CONTRACTOR. PROVIDE WITH ZOELLER OIL SMART PUMP SWITCH, ALARM, AND SENSOR.									
RD-1	ROOF DRAIN	ZURN	ZC-100-C	MIFAB	R1200-U	JR SMITH		-	-	-
	15" DIAMETER ROOF DRAIN WITH CAST IRON BODY, UNDER DECK CLAMP, GRAVEL GUARD AND LOW SILHOUETTE POLYDOME. SIZE AS NOTED ON DRAWINGS.									
OD-1	OVERFLOW DRAIN	ZURN	Z-122-C	MIFAB	R1220-U	JR SMITH		-	-	-
	12" DIAMETER DECK RECEPTOR DRAIN WITH CAST IRON BODY CLAMP/DECK RECEPTOR FRAME AND INTERNAL DOME STRAINER. SIZE OUTLET AS NOTED ON DRAWINGS.									
DN-1	DOWNSPOUT NOZZLE	ZURN	Z-199-SS	MIFAB	R1940-83			-	-	-
	PROVIDE WITH STAINLESS STEEL SCREEN. SIZE AS NOTED ON DRAWINGS.									

PLUMBING SCHEDULE NOTES AND LEGEND:

1. THE PLUMBING CONTRACTOR MAY SUBSTITUTE FIXTURES WITH OWNERS' APPROVAL.
2. SUBMIT CUT SHEETS FOR ALL PROPOSED FIXTURES TO ARCHITECT PRIOR TO BIDDING.
3. PROVIDE VACUUM BREAKER ON ALL EQUIPMENT REQUIRING PLUMBING.
4. REFER TO MANUFACTURERS WEB SITE FOR CUT SHEETS AND DATA ON THE FIXTURES AND APPURTENANCES USED IN THIS SCHEDULE.

⚡ ELECTRICAL POWER

PLUMBING GENERAL NOTES

1. ALL WORK SHALL BE DONE IN ACCORDANCE WITH THE LATEST EDITION OF THE STATE CODE, ALL LOCAL AND OTHER APPLICABLE CODES.
2. ANY PERMITS AND INSPECTION FEES SHALL BE SECURED AND PAID FOR BY THE PLUMBING CONTRACTOR.
3. ALL WORK SHALL BE PERFORMED BY EXPERIENCED AND SKILLED CRAFTSMAN. THE PLUMBING CONTRACTOR SHALL COORDINATE ALL OF HIS WORK WITH ALL OTHER CONTRACTORS.
4. THE PLUMBING PLANS AND SPECIFICATIONS SHALL BE THOROUGHLY REVIEWED PRIOR TO PURCHASING MATERIALS AND INSTALLATION. ALL DISCREPANCIES OR INTERFERENCE'S SHALL BE BROUGHT TO THE ENGINEERS ATTENTIONS.
5. THESE PLANS ARE DIAGRAMMATIC AND MAY NOT SHOW MINOR DETAILS AND LOCATIONS. FOR DIMENSIONS, REFER TO THE ARCHITECTURAL PLANS.
6. THE PLUMBING CONTRACTOR SHALL PROVIDE ALL OPENINGS REQUIRED FOR THE PLUMBING WORK. THE PATCHING SHALL BE BY THE PLUMBING CONTRACTOR AND FINISHING BY GENERAL CONTRACTOR.
7. WATER PIPING BELOW GRADE SHALL BE TYPE "K" COPPER (NO JOINTS BELOW GRADE) AND ABOVE GRADE TYPE "L" COPPER. SUPPORTED AS REQUIRED AND SHALL BE HYDROSTATICALLY TESTED FOR ONE HOUR AT 150 PSI. TEST TO COMPLY WITH ALL EPA STANDARDS. THE ENTIRE WATER DISTRIBUTION SYSTEM SHALL BE DISINFECTED PRIOR TO PLACING IN SERVICE.
8. WATER PIPING LOCATED ABOVE CEILINGS AND IN EXTERIOR WALLS SHALL BE ROUTED ON HEATED SIDE OF CEILING INSULATION (UNDERSIDE) AND WALL INSULATION (INSIDE).
9. ALL COLD AND HOT WATER PIPING SHALL BE INSULATED. INSULATE WASTE PIPING AS DESIGNATED ON PLUMBING DRAWINGS. INSULATION SHALL BE 1" FIBERGLASS. EXPOSED PIPING TO BE WRAPPED WITH ALUMINUM JACKET.
10. DO NOT SUPPORT PIPING FROM BAR JOIST BRIDGING AND/OR ROOF DECK.
11. WATER SHUT - OFF VALVES ABOVE FINISHED CEILING ARE TO BE FREE FROM OBSTRUCTIONS SUCH AS DUCTWORK, LIGHTS, WIRING AND OTHER PIPING SO AS TO PROVIDE EASY ACCESS. MOUNT NO MORE THAN 2'-0" ABOVE FINISHED CEILING.
12. IF THE WATER PRESSURE EXCEEDS 80 PSI A PRESSURE REDUCING VALVE SHALL BE INSTALLED WHERE THE WATER ENTERS THE BUILDING.
13. PLUMBING CONTRACTOR SHALL PROVIDE A DIELECTRIC UNION WHEN CONNECTING DISSIMILAR MATERIAL.
14. THE PLUMBING CONTRACTOR SHALL BE RESPONSIBLE FOR ALL ELECTRICAL AND CONTROL CONNECTIONS TO THE EQUIPMENT FURNISHED UNDER HIS CONTRACT.
15. SANITARY SEWER AND VENT PIPING SHALL BE SCHEDULE 40 PVC. CELLULAR CORE (FOAM CORE) IS NOT ALLOWED. SANITARY SEWER AND VENT PIPING SHALL BE GAS AND AIR TIGHT.
16. THE PLUMBING CONTRACTOR SHALL COORDINATE ALL WORK WITH OTHER TRADES PRIOR TO INSTALLATION OF ANY WORK.
17. THE PLUMBING CONTRACTOR SHALL REVIEW ALL UTILITY SITE PLANS FOR WORK BY OTHERS. IT SHALL BE THE RESPONSIBILITY OF THE CONTRACTOR TO COORDINATE HIS WORK WITH WORK BY OTHERS AND AVOID ALL CONFLICTS.
18. LOCATIONS OF UTILITIES (WASTE AND WATER PIPING, ETC.) PROVIDED BY OTHERS, THAT ARE TO BE CONNECTED TO ARE ASSUMED. IT SHALL BE THE RESPONSIBILITY OF THE PLUMBING CONTRACTOR TO VERIFY THESE LOCATIONS AND MAKE FINAL CONNECTIONS AS REQUIRED.
19. VERIFY THE LOCATION OF ALL EQUIPMENT SUPPLIED BY OTHERS.
20. ROOF DRAIN LEADERS SHALL BE SCHEDULE 40 PVC. HORIZONTAL PIPING IS TO SLOPE AT 1/8" PER FOOT.
21. ALL EQUIPMENT DIRECTLY CONNECTED TO THE WATER SYSTEM SHALL BE PROVIDED WITH A DOUBLE CHECK VALVE AS APPROVED BY THE CITY OF RALEIGH.
22. ALL VENT PIPING THROUGH THE ROOF SHALL BE A MINIMUM OF 15'-0" FROM ALL MAKE-UP AIR INLETS OR A MINIMUM OF 2'-0" ABOVE THE TOP OF ALL MAKE-UP AIR INLETS. VENTS THROUGH ROOF ARE TO BE ON REAR OF BUILDING.
23. THE PLUMBING CONTRACTOR SHALL VERIFY BUILDING FLOOR ELEVATION IS ABOVE MANHOLE RIM ELEVATION OR PROVIDE A BACKWATER VALVE AS REQUIRED.
24. THE PLUMBING CONTRACTOR SHALL PROVIDE THE ENGINEER WITH A SET OF AS-BUILT DRAWINGS UPON COMPLETION OF PROJECT.

PLUMBING SYMBOL LEGEND

SYMBOL	DESCRIPTION
	COLD WATER PIPING
	WATER PIPING DIRECTION OF FLOW
	BALL VALVE
	WATER PIPING TURNED DOWN
	WATER PIPING TURNED UP
	PIPING SIDE CONNECTION
	SANITARY SEWER / WASTE PIPING
	SANITARY SEWER / WASTE PIPING DIRECTION OF FLOW
	VENT PIPING
	VENT PIPE UP
	PLUMBING FIXTURE PROVIDED AND INSTALLED BY PLUMBING CONTRACTOR
	PLUMBING FIXTURE PROVIDED BY OTHERS AND INSTALLED BY PLUMBING CONTRACTOR

New Shell Building
Heritage Park West
3125 Rogers Road
Wake Forest, North Carolina

ATLANTEC ENGINEERS, PA
322 BLUE RIDGE ROAD, SUITE 103
RALEIGH, NC 27612
(919) 571-111
805 ST. JAMES PLACE
HOUSTON, NC 28504
(228) 327-3336
16227

PROGRESS DRAWING
NOT RELEASED FOR CONSTRUCTION
JOHN B. DELPAPA

MAURER ARCHITECTURE
115.5 EAST HARGETT STREET, SUITE 300
RALEIGH, NC 27601
TEL. 919-829-4969 FAX. 919-829-0860

DATE	12.02.16
DR.	DRD
CH.	JBD
PROJ. #	16096
REVISIONS	DATE

PLUMBING NOTES, LEGEND, AND FIXTURE SCHEDULE

P2.2

16227

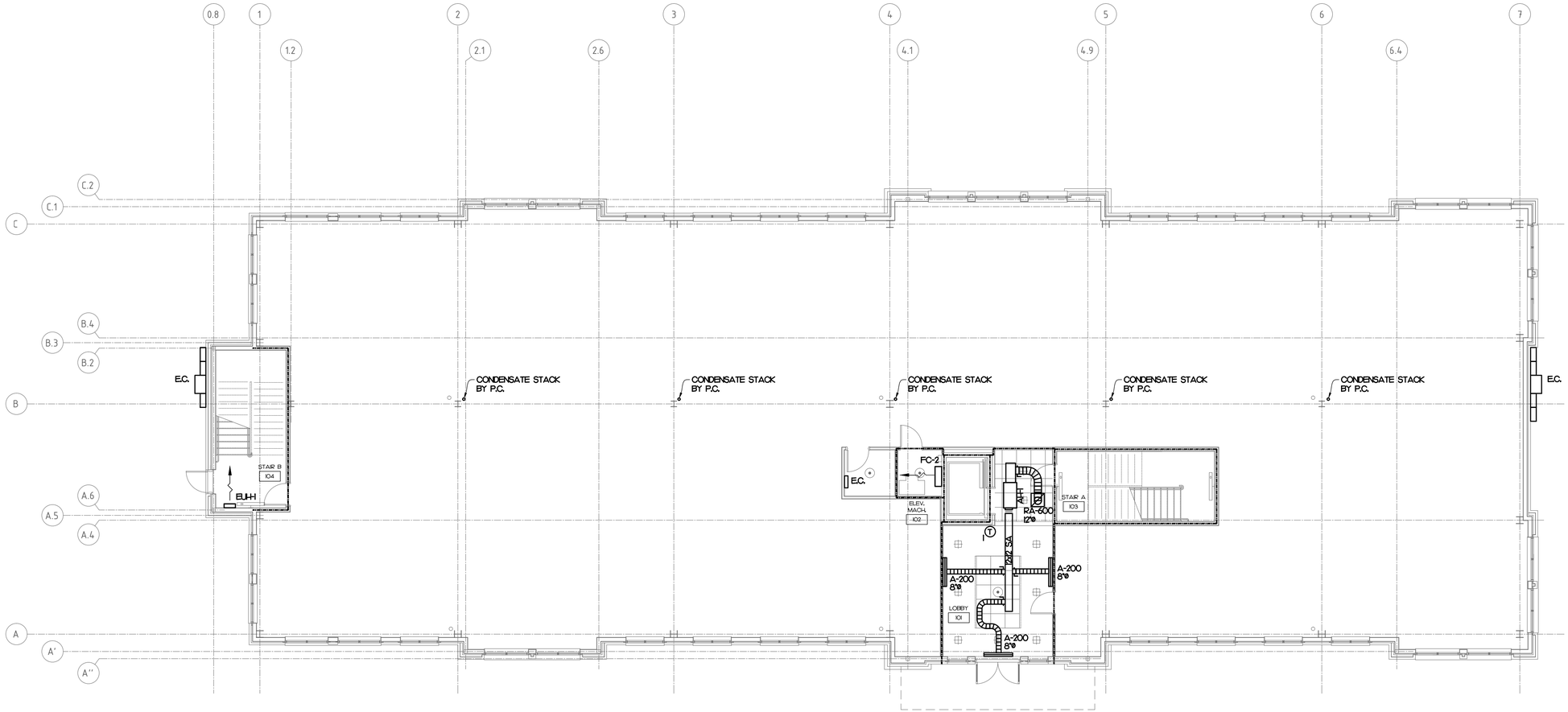

1 M1.1 MECHANICAL PLAN

SCALE: 1/8" = 1'-0"

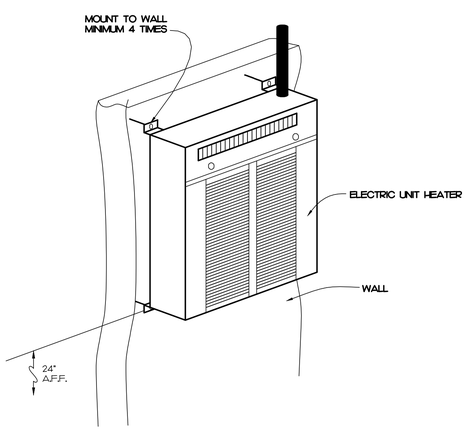

1 M1.1 ELECTRIC WALL HEATER DETAIL

SCALE: NTS

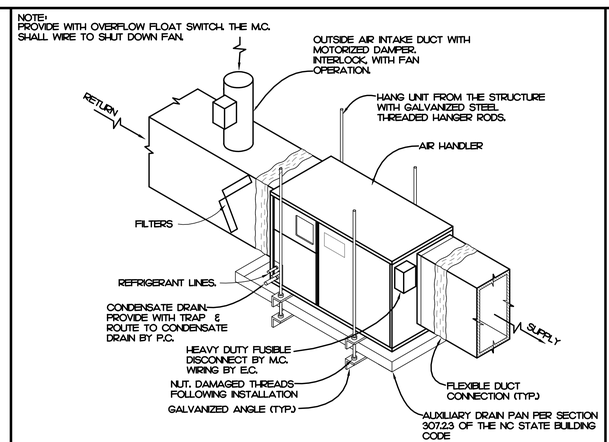

2 M1.1 AIR HANDLING UNIT DETAIL

SCALE: NTS

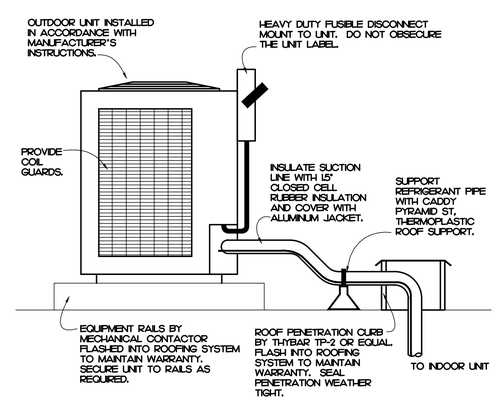

3 M1.1 OUTDOOR UNIT DETAIL

SCALE: NTS

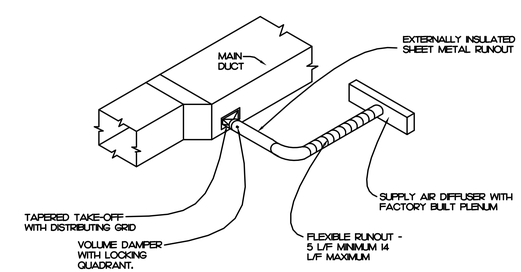

4 M1.1 DIFFUSER DETAIL

SCALE: NTS

N227

New Shell Building
Heritage Park West
3125 Rogers Road
Wake Forest, North Carolina

ATLANTEC ENGINEERS, PA
323 BLUE RIDGE ROAD, SUITE 103
RALEIGH, NC 27612
(919) 571-111
809 ST. JAMES PLACE
KINSTON, NC 28504
(252) 527-5536
N227

PROGRESS DRAWING NOT FOR CONSTRUCTION RELEASED FOR REVIEW 12/12/2016

MAURER ARCHITECTURE
115.5 EAST HARGETT STREET, SUITE 300
RALEIGH, NC 27601
TEL. 919-829-4969 FAX. 919-829-0860

DATE	11.22.16
DR.	WSM
CH.	JBD
PROJ. #	16096
REVISIONS	DATE

MECHANICAL PLAN

M1.1

SYSTEM NO. WL100I

F RATINGS - 1, 2, 3 AND 4 HOUR (SEE ITEMS 2 AND 3)
T RATINGS - 0, 1, 2, 3 AND 4 HOUR (SEE ITEM 3)
L RATING AT AMBIENT - LESS THAN 1 CFM/SQ FT
L RATING AT 400 F - LESS THAN 1 CFM/SQ FT

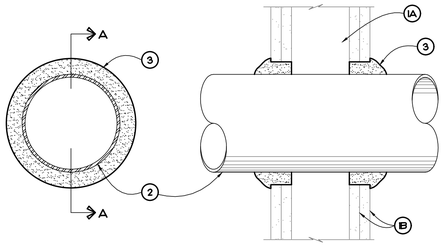

SECTION A - A

(1) WALL ASSEMBLY - THE 1, 2, 3 OR 4 HOUR FIRE-RATED GYPSUM WALLBOARD/STUD WALL ASSEMBLY SHALL BE CONSTRUCTED OF THE MATERIALS AND IN THE MANNER DESCRIBED IN THE INDIVIDUAL U300 OR U400 SERIES WALL OR PARTITION DESIGNS IN THE UL FIRE RESISTANCE DIRECTORY AND SHALL INCLUDE THE FOLLOWING CONSTRUCTION FEATURES:

A. STUDS - WALL FRAMING MAY CONSIST OF EITHER WOOD STUDS (MAXIMUM 2 HOUR FIRE RATED ASSEMBLIES) OR STEEL CHANNEL STUDS. WOOD STUDS TO CONSIST OF NOMINAL 2" x 4" LUMBER SPACED 16" ON CENTER WITH NOMINAL 2" x 4" LUMBER END PLATES AND CROSS BRACES. STEEL STUDS TO BE MINIMUM 3 5/8" WIDE x 1 3/8" DEEP CHANNELS SPACED MAXIMUM 24" ON CENTER.

B. GYPSUM BOARD* - NOMINAL 1/2" OR 5/8" THICK, 4' WIDE WITH SQUARE OR TAPERED EDGES. THE GYPSUM WALLBOARD TYPE, THICKNESS, NUMBER OF LAYERS, FASTENER TYPE AND SHEET ORIENTATION SHALL BE AS SPECIFIED IN THE INDIVIDUAL U300 OR U400 SERIES DESIGN IN THE UL FIRE RESISTANCE DIRECTORY. MAXIMUM DIAMETER OF OPENING IS 26".

(2) THROUGH PENETRANT - ONE METALLIC PIPE, CONDUIT OR TUBING INSTALLED EITHER CONCENTRICALLY OR ECCENTRICALLY WITHIN THE FIRESTOP SYSTEM. THE ANNULAR SPACE BETWEEN PIPE, CONDUIT OR TUBING AND PERIPHERY OF OPENING SHALL BE MINIMUM OF 0" (POINT CONTACT) TO MAXIMUM 2" PIPE, CONDUIT OR TUBING TO BE RIGIDLY SUPPORTED ON BOTH SIDES OF WALL ASSEMBLY. THE FOLLOWING TYPES AND SIZES OF METALLIC PIPES, CONDUITS OR TUBING MAY BE USED:

A. STEEL PIPE - NOMINAL 24" DIAMETER (OR SMALLER) SCHEDULE 10 (OR HEAVIER) STEEL PIPE.

B. IRON PIPE - NOMINAL 24" DIAMETER (OR SMALLER) SERVICE WEIGHT (OR HEAVIER) CAST IRON SOIL PIPE, NOMINAL 12" DIAMETER (OR SMALLER) OR CLASS 50 (OR HEAVIER) DUCTILE IRON PRESSURE PIPE.

C. CONDUIT - NOMINAL 6" DIAMETER (OR SMALLER) STEEL CONDUIT OR NOMINAL 4" DIAMETER (OR SMALLER) STEEL ELECTRICAL METALLIC TUBING.

D. COPPER TUBING - NOMINAL 6" DIAMETER (OR SMALLER) TYPE L (OR HEAVIER) COPPER TUBING.

E. COPPER PIPE - NOMINAL 6" DIAMETER (OR SMALLER) REGULAR (OR HEAVIER) COPPER PIPE.

F. THROUGH PENETRATING PRODUCT* - FLEXIBLE METAL PIPING - THE FOLLOWING TYPES OF STEEL FLEXIBLE METAL GAS PIPING MAY BE USED:

1. NOMINAL 2" DIAMETER (OR SMALLER) STEEL FLEXIBLE METAL GAS PIPING. PLASTIC COVERING ON PIPING MAY OR MAY NOT BE REMOVED ON BOTH SIDES OF FLOOR OR WALL ASSEMBLY.
OMEGA FLEX INC

2. NOMINAL 1" DIAMETER (OR SMALLER) STEEL FLEXIBLE METAL GAS PIPING. PLASTIC COVERING ON PIPING MAY OR MAY NOT BE REMOVED ON BOTH SIDES OF FLOOR OR WALL ASSEMBLY.
TITEFLEX CORP
A BUNDY CO

3. NOMINAL 1" DIAMETER (OR SMALLER) STEEL FEXIBLE METAL GAS PIPING. PLASTIC COVERING ON PIPING MAY OR MAY NOT BE REMOVED ON BOTH SIDES OF FLOOR OR WALL ASSEMBLY.
WARD MFG INC

(3) FILL, VOID OR CAVITY MATERIAL* - CAULK OR SEALANT - MINIMUM 5/8", 1 1/4", 1 7/8" AND 2 1/2" THICKNESS OF CAULK FOR 1, 2, 3 AND 4 HOUR RATED ASSEMBLIES, RESPECTIVELY, APPLIED WITHIN ANNULUS, FLUSH WITH BOTH SURFACES OF WALL. MINIMUM 1/4" DIAMETER BEAD OF CAULK APPLIED TO GYPSUM BOARD/PENETRANT INTERFACE AT POINT CONTACT LOCATION ON BOTH SIDES OF WALL. THE HOURLY F RATING OF THE FIRESTOP SYSTEM IS DEPENDENT UPON THE HOURLY FIRE RATING OF THE WALL ASSEMBLY IN WHICH IT IS INSTALLED, AS SHOWN IN THE FOLLOWING TABLE. THE HOURLY T RATING OF THE FIRESTOP SYSTEM IS DEPENDENT UPON THE TYPE OR SIZE OF THE PIPE OR CONDUIT AND THE HOURLY FIRE RATING OF THE WALL ASSEMBLY IN WHICH IT IS INSTALLED, AS TABULATED BELOW:

MAXIMUM PIPE OR CONDUIT DIAMETER INCHES	F RATING HOUR	T RATING HOUR
1	1 OR 2	0+, 1 OR 2
1	3 OR 4	3 OR 4
4	1 OR 2	0
6	3 OR 4	0
12	1 OR 2	0

+WHEN COPPER PIPE IS USED, T RATING IS 0 HOUR.
3M COMPANY - CP 25WB+ CAULK OR FB-3000 WT SEALANT.
*BEARING THE UL CLASSIFICATION MARKING

ELECTRIC UNIT HEATER SCHEDULE

MARK	BASIS OF DESIGN	LOCATION	CFM	CAPACITY (Btuh)	ELECTRICAL (A)	ELECTRICAL (kW)	ELECTRICAL POWER	NOTES
EUH-1	QMARK AWH	STAIRS	100	13650	19.2	4	208/1	1,2

NOTES:
1. MOUNT 24" A.F.F.
2. PROVIDE WITH WALL HANGING KIT.

GRILLE & DIFFUSER SCHEDULE

MARK	BASIS OF DESIGN	SERVICE	TYPE	MAX. CFM	FACE SIZE	NECK SIZE	NOTES
A	PRICE TBD3 48" LONG	SUPPLY	LINEAR SLOT	200	(2) - 1" SLOTS	8"ø	1,2,4
RA	PRICE 530	RETURN	LOUVERED LAY-IN	1000	24X24	SEE DWG	1-3

NOTES:
1. PROVIDE WITH WHITE FINISH.
2. PROVIDE WITH INSULATED SHEET METAL PLENUM.
3. GRILLE/DIFFUSER TO HAVE FULL LOUVERED FACE.
4. PROVIDE WITH FRAME FOR SURFACE MOUNTING.

DUCTLESS SPLIT SYSTEM SCHEDULE

INSIDE UNIT				OUTSIDE UNIT							
MARK	BASIS OF DESIGN	FAN CFM	FAN F.L.A.	MARK	COOLING CAPACITY	ELECTRICAL POWER	ELECTRICAL MCA	ELECTRICAL MOCP	EFFICIENCY COOLING	EFFICIENCY HEATING
FC-2	MITSUBISHI MSZ/MUY-GE09NA	300	0.76	CU-2	9.0 MBH	208/1	12	15	26 SEER	10 HSPF

NOTES:
1. PROVIDE FUSIBLE DISCONNECT ON OUTDOOR UNIT.
2. PROVIDE MOTOR RATED SWITCH FOR INDOOR UNIT.
3. PROVIDE WITH CONDENSATE PUMP AND ROUTE DISCHARGE TO EXTERIOR.
4. PROVIDE WITH WIRED THERMOSTAT.

SPLIT-SYSTEM HEAT PUMP SCHEDULE

INSIDE UNIT									OUTSIDE UNIT											
MARK	BASIS OF DESIGN	FAN CFM	FAN S.P.	FAN HP	SUPP. HEAT	ELECTRICAL POWER	ELECTRICAL FLA	ELECTRICAL MOCP	MARK	BASIS OF DESIGN	CAPACITY TOTAL	CAPACITY SENSIBLE	HEATING CAPACITY	ELECTRICAL POWER	ELECTRICAL FLA	ELECTRICAL MOCP	EFFICIENCY COOLING	EFFICIENCY HEATING	NOTES
AHU-1	CARRIER FX4CD18	600	0.5	1/3	3.8 kW	208/1	20.9	30	HP-1	CARRIER 25HBC318	17.2 MBH	13.0 MBH	18.0 MBH	208/1	9.5	20	13 SEER	7.7 HSPF	1-7

NOTES:
1. PROVIDE WITH FUSIBLE DISCONNECT ON INDOOR AND OUTDOOR UNITS.
2. PROVIDE WITH SINGLE POINT ELECTRICAL CONNECTION.
3. PROVIDE WITH PROGRAMMABLE THERMOSTAT WITH 10 HR BATTERY BACKUP AND 2 HOUR OVERRIDE.
4. SEE OUTSIDE AIR SUMMARY FOR OUTSIDE AIR INTAKE FLOW SETTINGS.
5. ROUTE CONDENSATE TO CONDENSATE DRAIN.
6. PROVIDE WITH 2" PLEATED FILTER RACK AND FILTER AT UNIT.
7. PROVIDE WITH OUTDOOR THERMOSTAT WIRED TO PREVENT THE OPERATION OF ELECTRIC HEAT WHEN HEAT PUMP IS CAPABLE OF SATISFYING THE LOAD.

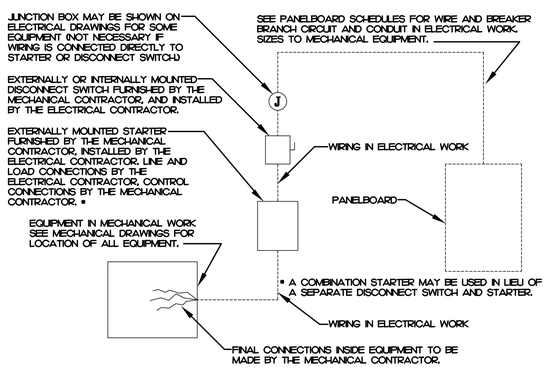

1 / M2.1 TYPICAL WIRING DETAIL

SCALE: NTS

SYMBOL LEGEND

NEW SHEET METAL DUCT

NEW FLEXIBLE DUCT

SUPPLY DIFFUSER - LETTER & NUMBER INDICATES TYPE & CFM

RETURN GRILLE - LETTER & NUMBER INDICATES TYPE & CFM

T — THERMOSTAT - MOUNTED 48" ABOVE FINISHED FLOOR

BD — BALANCING DAMPER

1 HOUR FIRE RATED WALL

GENERAL NOTES

1. ALL WORK SHALL BE DONE IN ACCORDANCE WITH THE LATEST EDITION OF THE STATE CODE, ALL LOCAL AND OTHER APPLICABLE CODES
2. ANY PERMITS AND INSPECTION FEES SHALL BE SECURED AND PAID FOR BY THE MECHANICAL CONTRACTOR (M.C.).
3. ALL WORK SHALL BE PERFORMED BY EXPERIENCED AND SKILLED CRAFTSMAN. THE M.C. SHALL COORDINATE ALL OF HIS WORK WITH ALL OTHER CONTRACTORS.
4. THE MECHANICAL PLANS AND SPECIFICATIONS SHALL BE THOROUGHLY REVIEWED PRIOR TO PURCHASING MATERIALS AND INSTALLATION. ALL DISCREPANCIES OR INTERFERENCES SHALL BE BROUGHT TO THE ENGINEERS' ATTENTION.
5. THESE PLANS ARE DIAGRAMMATIC AND MAY NOT SHOW MINOR DETAILS AND LOCATIONS. FOR DIMENSIONS, REFER TO THE ARCHITECTURAL PLANS.
6. THE M.C. SHALL BE RESPONSIBLE FOR ALL ELECTRICAL STARTERS, INTERLOCKS, CONTROL WIRING. THE ELECTRICAL CONTRACTOR SHALL PROVIDE POWER WIRING, CONDUIT FROM THE DISCONNECT TO M.C. EQUIPMENT. THE M.C. SHALL BE RESPONSIBLE FOR ALL FINAL CONNECTION TO HIS EQUIPMENT.
7. INSTALL FLEXIBLE CONNECTORS ON SUPPLY AND RETURN DUCTWORK AT ALL AIR HANDLING UNITS.
8. INSTALL TURNING VANES IN SUPPLY DUCTS AT ELBOWS. PROVIDE BALANCING AND SPLITTER DAMPERS WHERE SHOWN AND AS REQUIRED FOR SYSTEM BALANCING.
9. ALL THERMOSTATS, WIRING AND CONDUIT ARE TO BE FURNISHED BY THE M.C. MOUNT THERMOSTATS 4'-0" ABOVE THE FLOOR, UNLESS OTHERWISE NOTED.
10. THE M.C. SHALL INSURE THAT ALL MECHANICAL EQUIPMENT INSTALLED UNDER HIS CONTRACT SHALL OPERATE FREE OF OBJECTIONABLE NOISE AND VIBRATION.
11. THE M.C. SHALL KEEP THE PREMISES CLEAR OF DEBRIS FROM HIS WORK DURING CONSTRUCTION AND LEAVE THE AREA AND BUILDING CLEAN AT THE COMPLETION OF HIS WORK. HE SHALL ALSO LEAVE CLEAN ALL EXPOSED EQUIPMENT IN HIS CONTRACT.
12. FLEXIBLE DUCT RUNOUTS SHALL BE A MAXIMUM OF 14'-0".
13. ALL FLEXIBLE DUCT RUNOUTS SHALL INCLUDE INSULATED DAMPERED BOOTS AT THE POINT OF CONNECTION WITH RECTANGULAR DUCT. PROVIDE ALL FLEXIBLE DUCTWORK WITH FOIL-BACKED, EXTERNALLY WRAPPED INSULATION FOR A MINIMUM OF R-8.
14. ALL DUCTWORK SIZES SHOWN ARE ACTUAL SHEET METAL DIMENSIONS. EXTERNALLY WRAP ALL DUCT WITH 3" FOIL-BACKED INSULATION FOR A MINIMUM OF R-8.
15. THE AIR HANDLING UNIT SHALL OPERATE AT ALL TIMES DURING OCCUPIED HOURS.
16. THE MECHANICAL CONTRACTOR SHALL PROVIDE THE ENGINEER WITH A SET OF AS-BUILT DRAWINGS UPON COMPLETION OF JOB.
17. THE MECHANICAL CONTRACTOR SHALL PROVIDE THE ENGINEER WITH A SET OF DUCT SHOP DRAWINGS FOR APPROVAL.
18. THE MECHANICAL CONTRACTOR SHALL PROVIDE THE ENGINEER WITH A BALANCE REPORT BY A CERTIFIED TEST AND BALANCE COMPANY.

MECHANICAL SYSTEMS, SERVICE SYSTEMS AND EQUIPMENT METHOD OF COMPLIANCE

PRESCRIPTIVE ☐ ENERGY COST BUDGET ☐

THERMAL ZONE 4

EXTERIOR DESIGN CONDITIONS
winter dry bulb: 16°F
summer dry bulb: 93°F
relative humidity: 46%

INTERIOR DESIGN CONDITIONS
winter dry bulb: 70°F
summer dry bulb: 74°F
relative humidity: 50%

BUILDING HEATING LOAD: BLOCK LOAD = 10 MBH

BUILDING COOLING LOAD: BLOCK LOAD = 14.4 MBH (1.2 TONS)

MECHANICAL SPACING CONDITIONING SYSTEM
Unitary:
description of unit:
heating efficiency:
cooling efficiency:
heat output of unit:
cooling output of unit:
} SEE SCHEDULES ON SHEET(S) THIS SHEET
Boiler: NA
total boiler capacity. If oversized state reason.
Chiller: NA
total chiller capacity. If oversized state reason.

LIST EQUIPMENT EFFICIENCIES: SEE SCHEDULES ON SHEET(S) THIS SHEET

EQUIPMENT SCHEDULES WITH MOTORS (MECHANICAL SYSTEMS)
motor horsepower:
number of phases:
minimum efficiency:
motor type:
# of poles:
} SEE SCHEDULES ON SHEET(S) THIS SHEET

DESIGNER STATEMENT

To the best of my knowledge and belief, the design of this building complies with the mechanical systems, service systems and equipment requirements of the North Carolina State Energy Code.

SIGNED: _____

NAME: James B. Delpopa Jr. PE

TITLE: Professional Engineer

New Shell Building
Heritage Park West
3125 Rogers Road
Wake Forest, North Carolina

ATLANTEC ENGINEERS, PA
322 BLUE RIDGE ROAD, SUITE 13
RALEIGH, NC 27612
(919) 571-111
1100 ST. JAMES PLACE
KINSTON, NC 28504
(252) 527-5536
16227

PROGRESS DRAWING NOT FOR CONSTRUCTION
RELEASED FOR PERMIT REVIEW

MAURER ARCHITECTURE
115.5 EAST HARGETT STREET, SUITE 300
RALEIGH, NC 27601
TEL. 919-829-4969 FAX. 919-829-0860

DATE	11.22.16
DR.	WSM
CH.	JBD
PROJ. #	16096
REVISIONS	DATE

MECHANICAL NOTES, LEGENDS, AND SCHEDULES

M2.1

16227

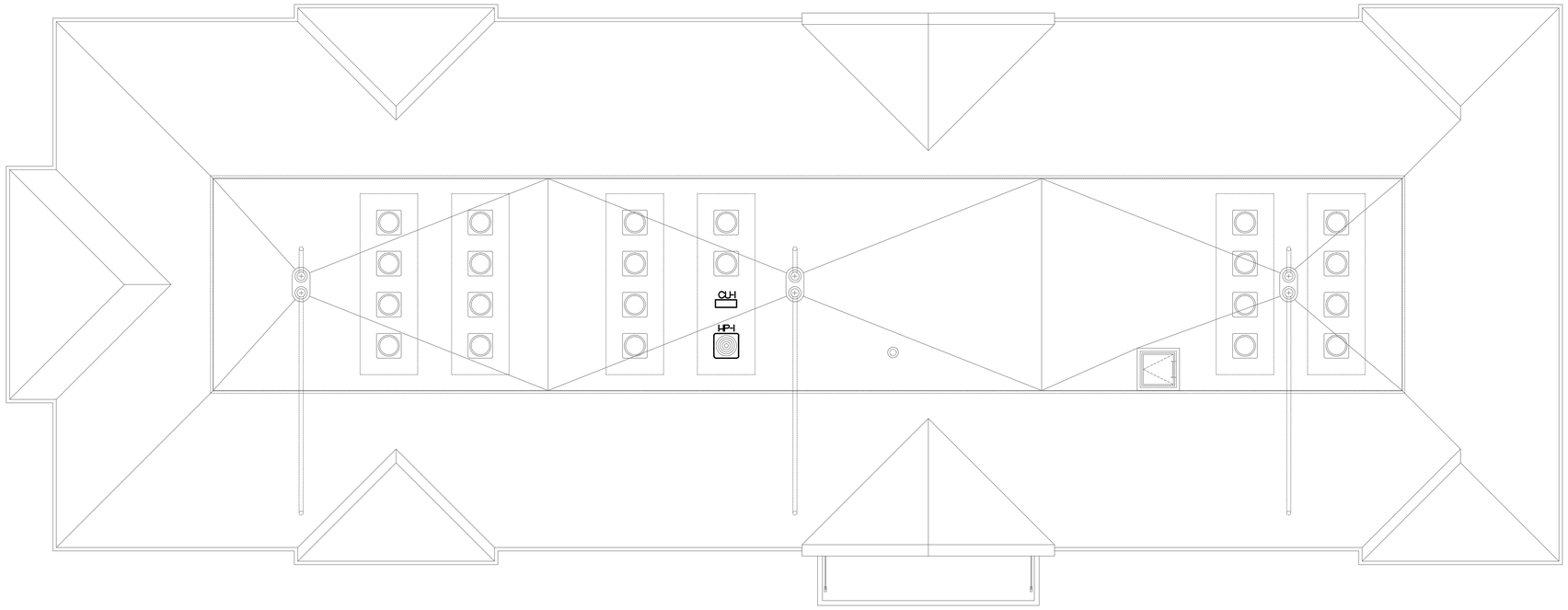

1 MU1 MECHANICAL ROOF PLAN

SCALE: 1/8" = 1'-0"

New Shell Building

Heritage Park West

3125 Rogers Road

Wake Forest, North Carolina

ATLANTEC ENGINEERS, PA
323 BLUE RIDGE ROAD, SUITE 13
RALEIGH, NC 27612
(919) 571-111

809 ST. JAMES PLACE
KINSTON, NC 28504
(252) 527-3336

N227

PROGRESS DRAWING
NOT FOR CONSTRUCTION
NOT RELEASED
FOR PERMIT REVIEW
SEAL/APPROVAL

MAURER ARCHITECTURE
115.5 EAST HARGETT STREET, SUITE 300
RALEIGH, NC 27601
TEL. 919-829-4969 FAX. 919-829-0860

DATE	11.22.16
DR.	WSM
CH.	JBD
PROJ. #	16096
REVISIONS	DATE

MECHANICAL ROOF PLAN

M2.2

16227

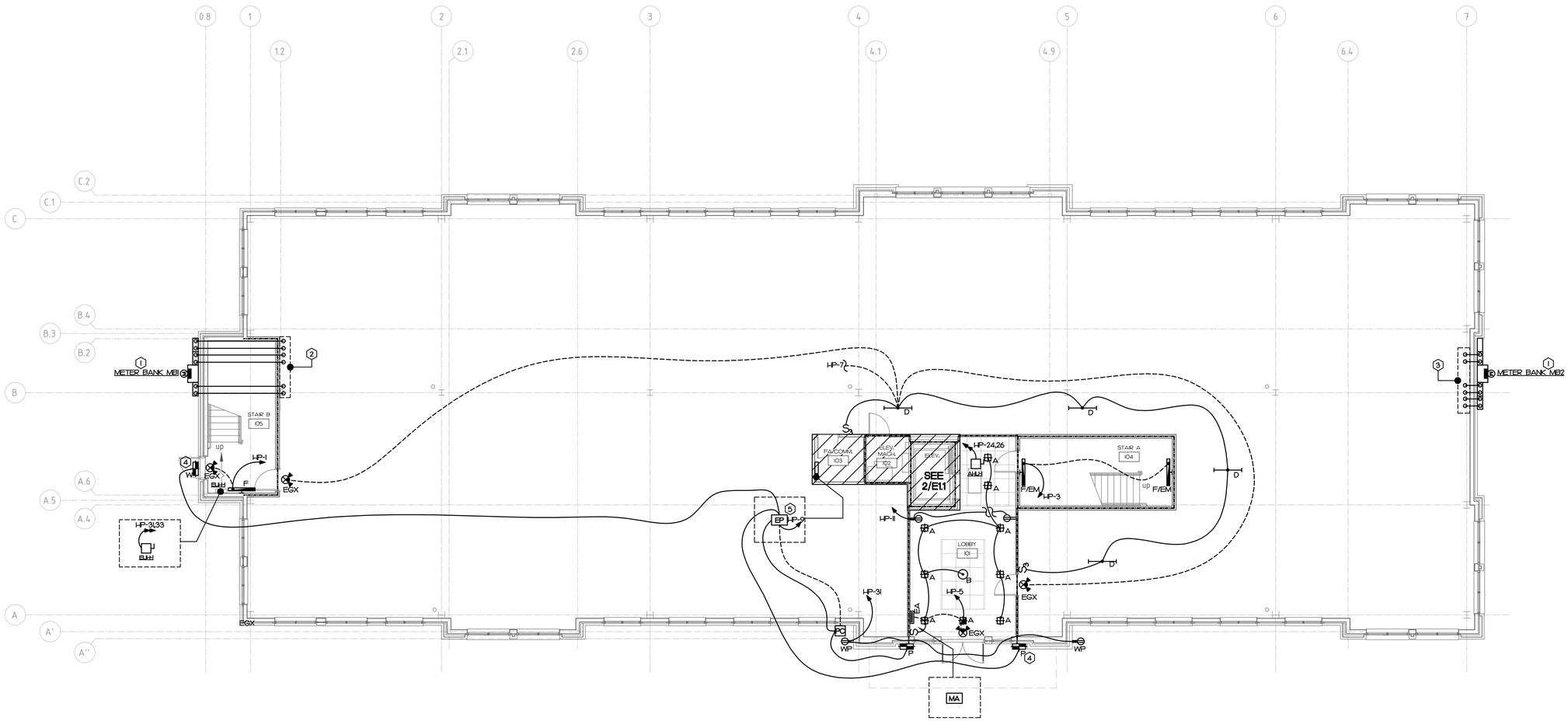

KEY NOTES

1. SERVICE METER BANK.
   SEE POWER RISER DIAGRAM FOR DETAIL.

2. 3 1/2" CONDUITS FROM METER BANK 1 FOR FUTURE TENANTS.
   - RUN UNDER SLAB TO OTHER SIDE OF STAIR B TOWER WALL AND STUB 12" FROM 1ST FLOOR CEILING DECK. DO NOT PENETRATE STAIR B TOWER WALL.
   - FIELD VERIFY TERMINATED LOCATION WITH ARCHITECT PRIOR TO ROUGH-IN.
   - TOTAL OF 6.
   - SEE POWER RISER DIAGRAM FOR DETAIL.

3. 3 1/2" CONDUITS FROM METER BANK 2 FOR FUTURE TENANTS.
   - RUN UNDER SLAB TO INSIDE BUILDING WALL AND STUB 12" FROM 1ST FLOOR CEILING DECK. FIELD VERIFY TERMINATED LOCATION WITH ARCHITECT PRIOR TO ROUGH-IN.
   - TOTAL OF 6.
   - SEE POWER RISER DIAGRAM FOR DETAIL.

4. EXTERIOR FIXTURE TO BE USED AS EXTERIOR EMERGENCY LIGHT. CONTROLLED BY EMERGENCY POWER UNIT PER KEY NOTE # 5.

5. EMERGENCY POWER UNIT FOR EXTERIOR EMERGENCY LIGHT.
   - CONNECT EMERGENCY CIRCUIT UNSWITCHED TO HOME RUN CIRCUIT.
   - CONNECT NORMAL CIRCUIT VIA PHOTOCELL.
   - LOCATE UNIT NEAR PANEL HP.

1 / E1.1 IST FLOOR ELECTRICAL PLAN

SCALE: 1/8" = 1'-0"

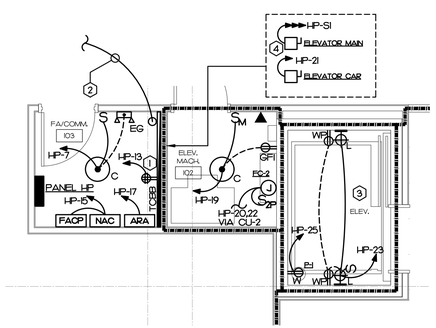

KEY NOTES

1. BUILDING COMMUNICATION SERVICE BOARD (DEMARC).
   - PROVIDE 3/4" THICK FIRE PROOF PLYWOOD TO COVER THIS WALL.
   - PROVIDE GROUND BAR AND 1-#6G CU IN 1/2"C TO MAIN GROUNDING AT METER BANK MB2.
   - MOUNT RECEPTACLE ON BOARD TO ACCOMMODATE EQUIPMENT.

2. COMMUNICATION SERVICE CONDUITS:
   - PROVIDE 2-4" EMPTY CONDUITS RUN UNDER SLAB AND GROUND TO PROPERTY LINE PER COMMUNICATION SERVICE COMPANY. PROVIDE WITH PULL WIRE.
   - PROVIDE CONDUIT SEALING AFTER UTILITY HAS INSTALLED THE SERVICE CABLES AS REQUIRED.

3. ELEVATOR PIT NOTES:
   - LOCATE SWITCH FOR PIT LIGHTS AND RECEPTACLES ADJACENT TO PIT ACCESS LADDER.
   - FIELD COORDINATE LOCATION OF SUMP PUMP RECEPTACLE WITH P.C.
   - MOUNT PIT LIGHT AND RECEPTACLE 18" ABOVE PIT FLOOR.

4. 200A, 240VAC, 3P NEMA 1 FUSIBLE DISCONNECT WITH LOCK CAPABILITY.

2 / E1.1 ENLARGED ELECTRICAL PLAN

SCALE: 1/4" = 1'-0"

16227

New Shell Building
Heritage Park West
3125 Rogers Road
Wake Forest, North Carolina

ATLANTEC ENGINEERS, PA
3201 BLUE RIDGE ROAD, SUITE 113
RALEIGH, NC 27612
(919) 571-111

1505 ST. JAMES PLACE
KINSTON, NC 28504
(252) 527-3536

16227

PROGRESS DRAWING
NOT RELEASED FOR CONSTRUCTION

MAURER ARCHITECTURE
115.5 EAST HARGETT STREET, SUITE 300
RALEIGH, NC 27601
TEL. 919-829-4969 FAX. 919-829-0860

DATE	12.02.16
DR.	SP
CH.	DJW
PROJ. #	16096
REVISIONS	DATE

1ST FLOOR ELECTRICAL PLAN

E1.1

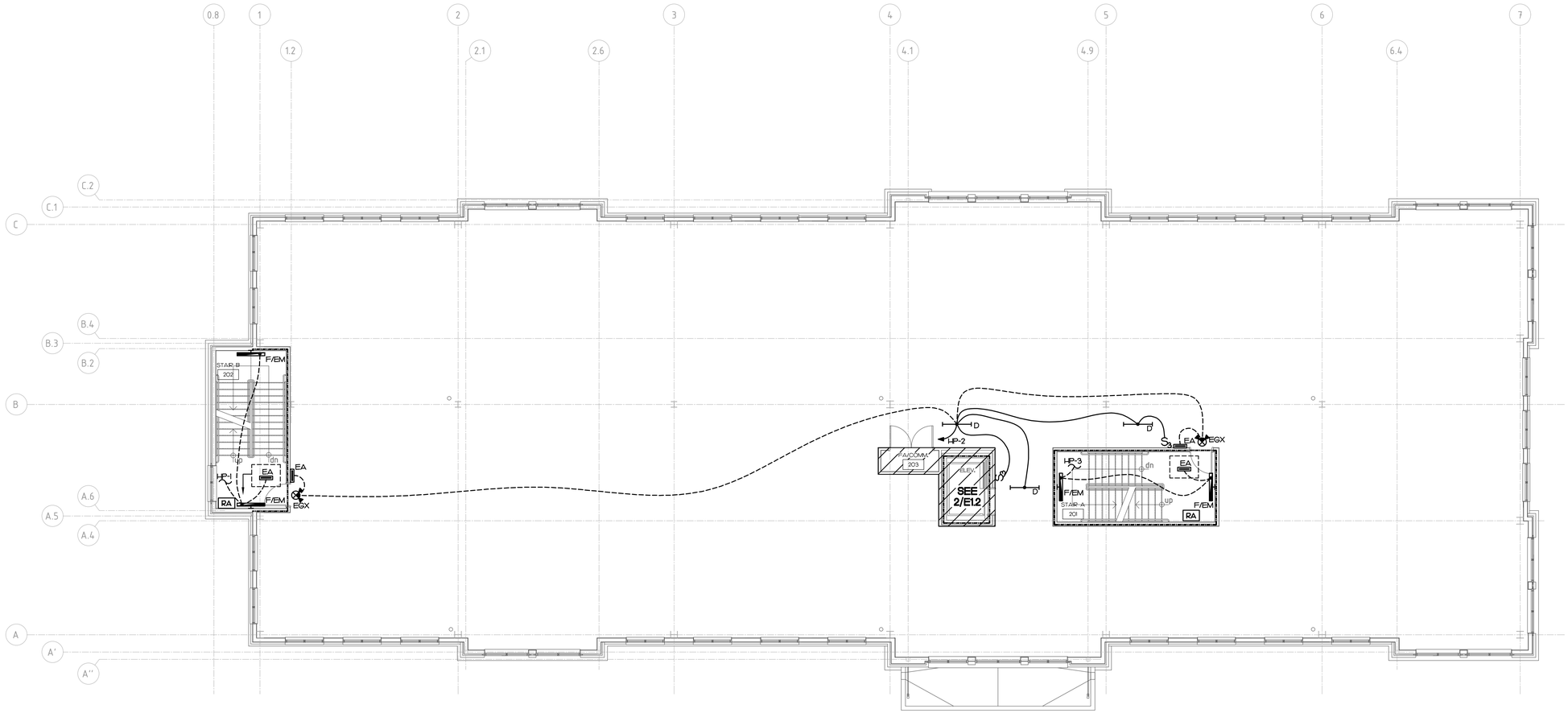

1 E1.2 2ND FLOOR ELECTRICAL PLAN

SCALE: 1/8" = 1'-0"

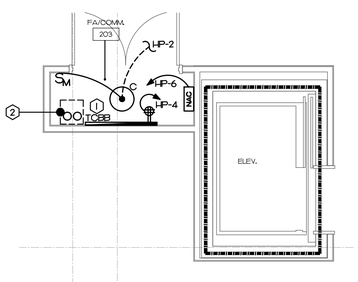

KEY NOTES

1. FLOOR COMMUNICATION SERVICE BOARD.
   - PROVIDE 48" X 96" 3/4" THICK FIRE PROOF PLYWOOD.
   - PROVIDE GROUND BAR AND 1-#6G CU IN 1/2"C TO GROUND BAR AT BUILDING COMMUNICATION SERVICE BOARD IN FA/COMM. #103.
   - MOUNT RECEPTACLE ON BOARD TO ACCOMMODATE EQUIPMENT.
2. COMMUNICATION SLEEVES:
   - AT FLOOR, PROVIDE 2 - 4" SLEEVES TO ABOVE BUILDING COMMUNICATION SERVICE BOARD IN FA/COMM. #103.
   - SEALING BY OTHERS.

2 E1.2 ENLARGED ELECTRICAL PLAN

SCALE: 1/4" = 1'-0"

16227

New Shell Building

Heritage Park West

3125 Rogers Road

Wake Forest, North Carolina

ATLANTEC ENGINEERS, PA
3201 BLUE RIDGE ROAD, SUITE 113
RALEIGH, NC 27612
(919) 571-111
1505 ST. JAMES PLACE
KINSTON, NC 28504
(252) 527-3536
16227

PROGRESS DRAWING
NOT RELEASED FOR CONSTRUCTION

MAURER ARCHITECTURE
115.5 EAST HARGETT STREET, SUITE 300
RALEIGH, NC 27601
TEL. 919-829-4969 FAX. 919-829-0860

DATE	12.02.16
DR.	SP
CH.	DJW
PROJ. #	16096
REVISIONS	DATE

2ND FLOOR ELECTRICAL PLAN

E1.2

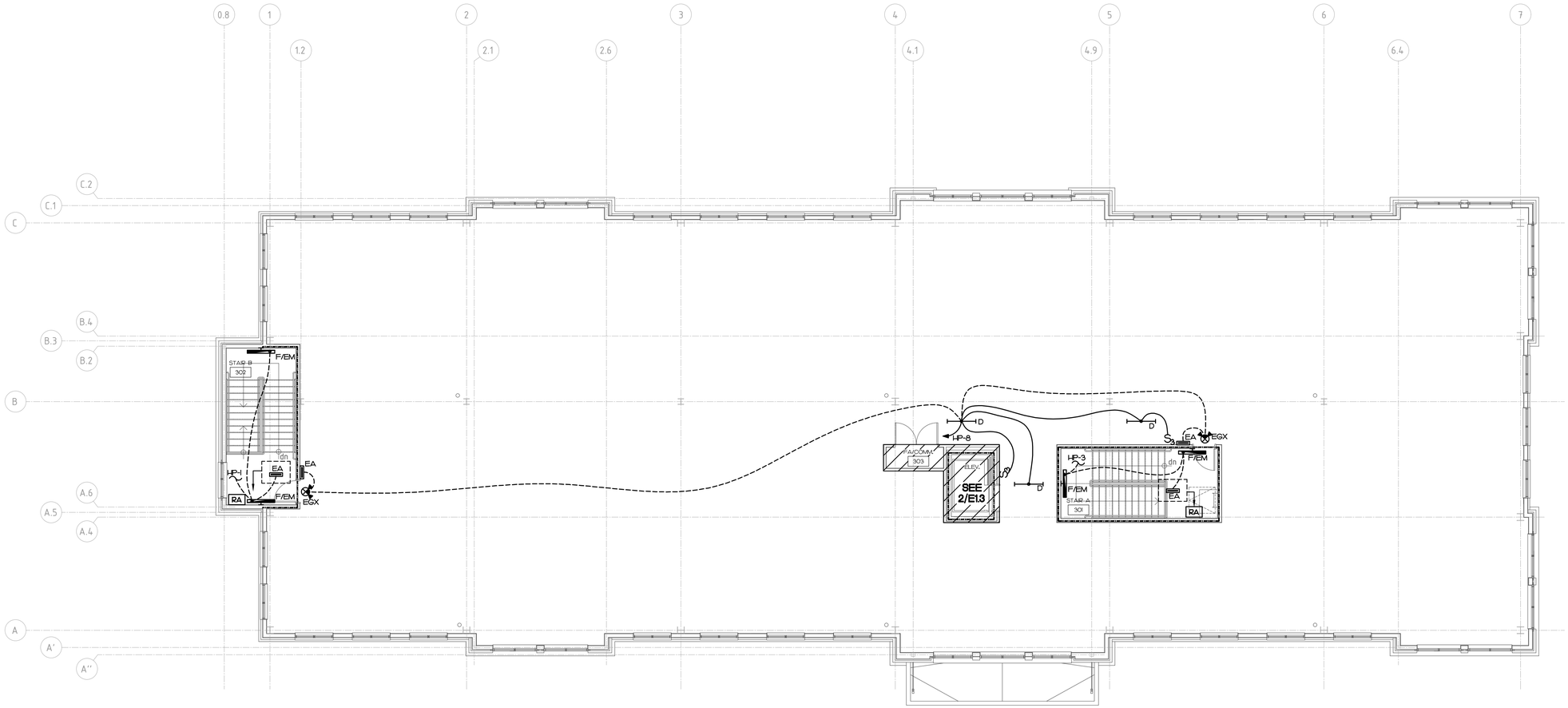

1 E1.3 3RD FLOOR ELECTRICAL PLAN

SCALE: 1/8" = 1'-0"

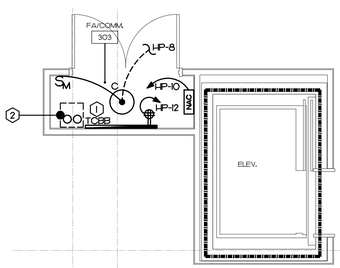

KEY NOTES

1. FLOOR COMMUNICATION SERVICE BOARD.
   - PROVIDE 48" X 96" 3/4" THICK FIRE PROOF PLYWOOD.
   - PROVIDE GROUND BAR AND 1-#6G CU IN 1/2"C TO GROUND BAR AT FLOOR COMMUNICATION SERVICE BOARD IN FA/COMM. #203.
   - MOUNT RECEPTACLE ON BOARD TO ACCOMMODATE EQUIPMENT.
2. COMMUNICATION SLEEVE:
   - AT FLOOR, PROVIDE 2 - 4" SLEEVES TO ABOVE FLOOR COMMUNICATION SERVICE BOARD IN FA/COMM. #203.
   - SEALING BY OTHERS.

2 E1.3 ENLARGED ELECTRICAL PLAN

SCALE: 1/4" = 1'-0"

16227

New Shell Building

Heritage Park West

3125 Rogers Road

Wake Forest, North Carolina

ATLANTEC ENGINEERS, PA
3201 BLUE RIDGE ROAD, SUITE 113
RALEIGH, NC 27612
(919) 571-111

825 ST. JAMES PLACE
KINSTON, NC 28504
(252) 527-3536

16227

PROGRESS DRAWING
NOT RELEASED FOR CONSTRUCTION

MAURER ARCHITECTURE
115.5 EAST HARGETT STREET, SUITE 300
RALEIGH, NC 27601
TEL. 919-829-4969 FAX. 919-829-0860

DATE	12.02.16
DR.	SP
CH.	DJW
PROJ. #	16096
REVISIONS	DATE

3RD FLOOR ELECTRICAL PLAN

E1.3

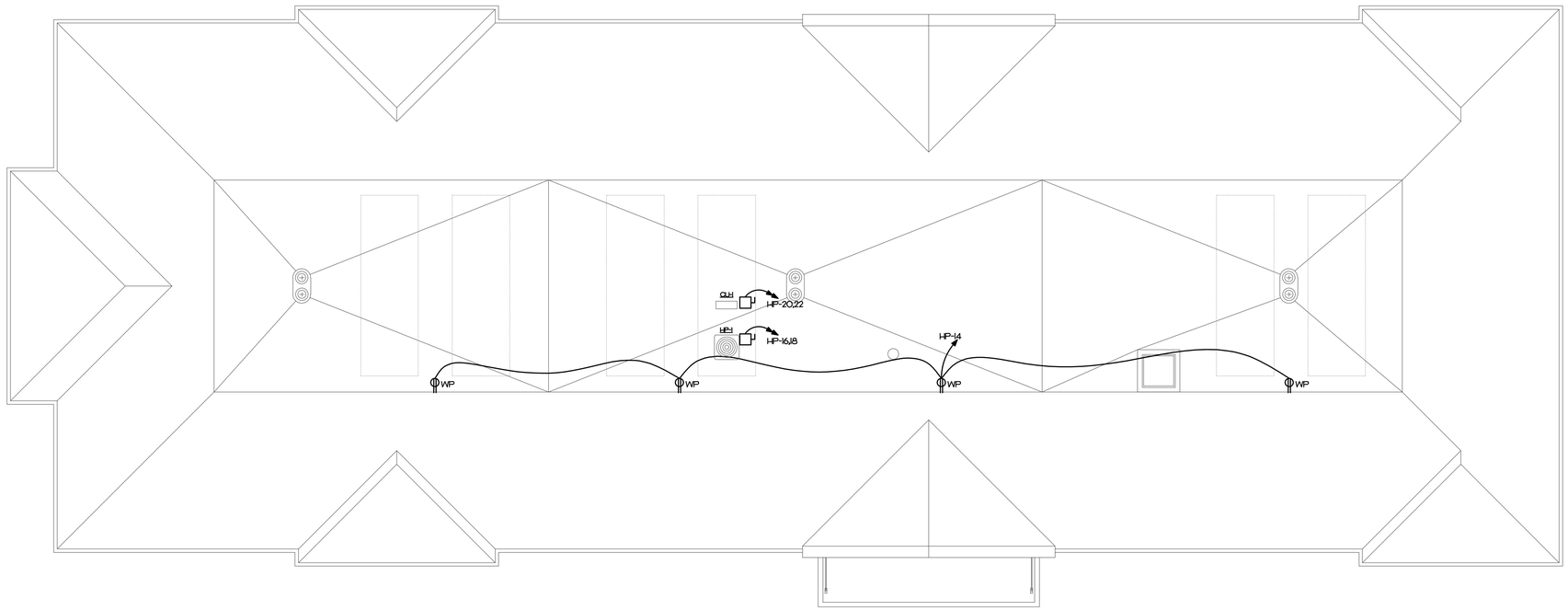

1 E1.4 ROOFTOP ELECTRICAL PLAN

SCALE: 1/8" = 1'-0"

16227

New Shell Building

Heritage Park West

3125 Rogers Road

Wake Forest, North Carolina

ATLANTEC ENGINEERS, PA
3201 BLUE RIDGE ROAD, SUITE 113
RALEIGH, NC 27612
(919) 571-111
1505 ST. JAMES PLACE
KINSTON, NC 28504
(252) 527-3336
16227

PROGRESS DRAWING
NOT RELEASED FOR CONSTRUCTION

MAURER ARCHITECTURE
115.5 EAST HARGETT STREET, SUITE 300
RALEIGH, NC 27601
TEL. 919-829-4969 FAX. 919-829-0860

DATE	12.02.16
DR.	SP
CH.	DJW
PROJ. #	16096
REVISIONS	DATE

ROOFTOP ELECTRICAL PLAN

E1.4

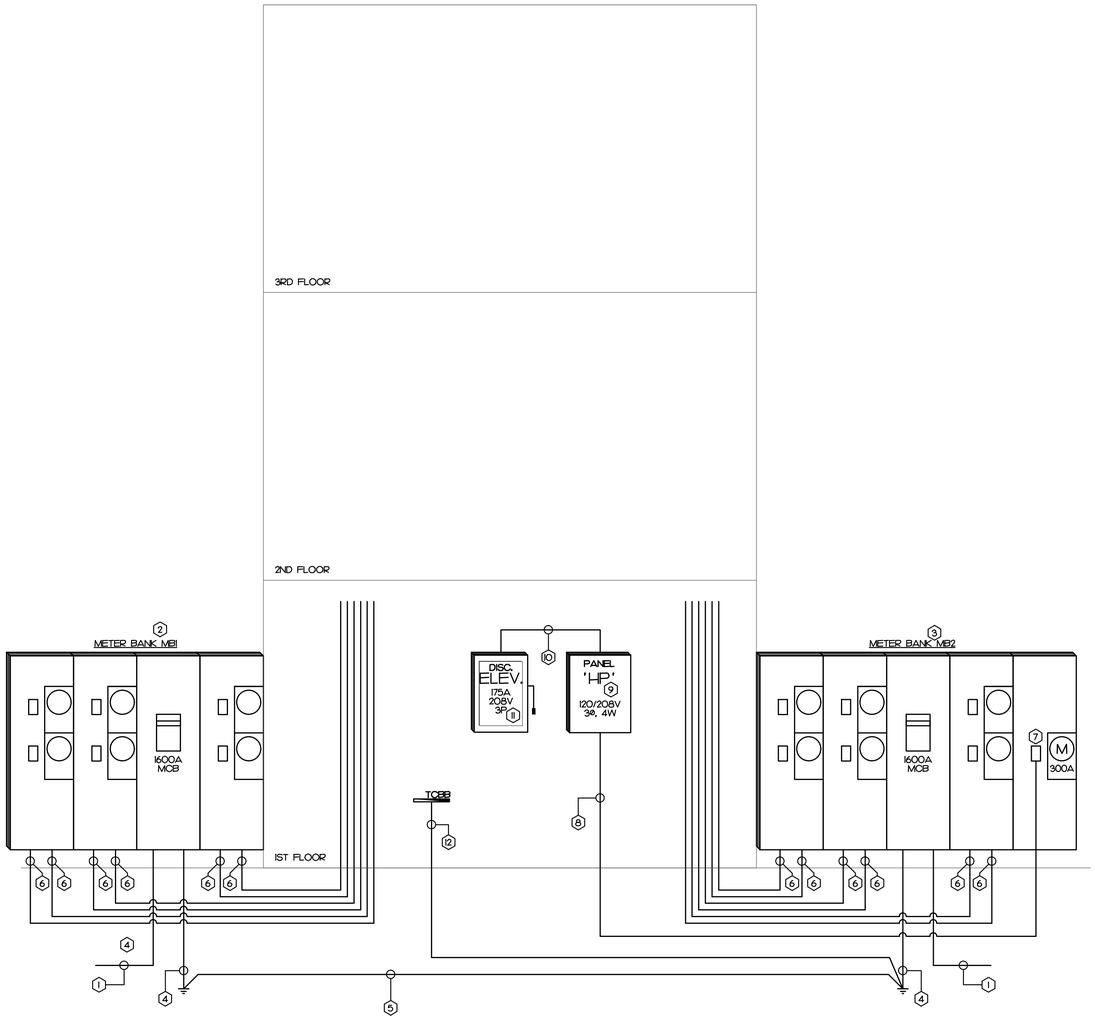

KEY NOTES

1. 120/208V 3Ø, 4W UNDERGROUND SERVICE BY UTILITY. E.C. SHALL TRENCH GROUND PER UTILITY INSTRUCTION.

2. SERVICE METER BANK MB1
   - 1600A MCB.
   - NEMA 3R ENCLOSURE.
   - MIN. AIC RATING OF 65KA.
   - 6 - 400A, 3 PHASE METER/BREAKER UNITS.
   - UL LISTED FOR USED AS SERVICE EQUIPMENT.
   - LABEL "SERVICE #1 OF 2"
   - E.C. SHALL FIELD VERIFY AVAILABLE MAXIMUM FAULT CURRENT WITH UTILITY AND PROVIDE LABEL INDICATING THE CURRENT ON METER BANK PER NEC 110.24(A).

3. SERVICE METER BANK MB2
   - 1600A MCB.
   - NEMA 3R ENCLOSURE.
   - MIN. AIC RATING OF 65KA.
   - 7 - 400A, 3 PHASE METER/BREAKER UNITS.
   - UL LISTED FOR USED AS SERVICE EQUIPMENT.
   - LABEL "SERVICE #2 OF 2"
   - E.C. SHALL FIELD VERIFY AVAILABLE MAXIMUM FAULT CURRENT WITH UTILITY AND PROVIDE LABEL INDICATING THE CURRENT ON METER BANK PER NEC 110.24(A).

4. GROUNDING ELECTRODE CONDUCTORS PER NEC 250.
   1-#3/0G CU IN 3/4"C TO BUILDING STEEL AND C.W. MAIN.
   1-#4G CU IN 3/4"C TO REINFORCE STEEL AT CONCRETE FOOTING.
   1-#6G CU IN 3/4"C TO 2 DRIVEN RODS.

5. PROVIDE 1-#3/0G CU TIE BETWEEN 2 SERVICES PER NEC 250.

6. FUTURE TENANT FEEDER CONDUIT.
   3 1/2"C RUN UNDER SLAB FROM METER BANK TO INSIDE BUILDING AND STUB 12" FROM 1ST FLOOR CEILING DECK.

7. METER/BREAKER UNIT FOR HOUSE LOAD. PROVIDE 300A/3P BREAKER. MIN. AIC RATING OF 65KA.

8. 4-#350KCMIL, 1-#4G IN 3 1/2"C.

9. HOUSE PANEL BOARD. SEE PANEL SCHEDULE FOR DETAIL.

10. ELEVATOR FEEDER. SEE PANEL SCHEDULE FOR DETAIL.

11. ELEVATOR DISCONNECT. SEE PLAN FOR DETAIL.

12. 1-#6G CU IN 1/2"C TO GROUND BAR AT DEMARC LOCATED IN FA/COMM. #103.

1 / E2.1 POWER RISER DIAGRAM

SCALE: NOT TO SCALE

METER BANK MB1 LOAD STATEMENT

FUTURE TENANT (6 TENANTS)	398.36	KVA
CURRENT AT 208V 3Ø	1107	AMPS.

METER BANK MB2 LOAD STATEMENT

FUTURE TENANT (6 TENANTS)	398.36	KVA
PANEL HP	56.97	KVA
TOTAL DEMAND LOAD	455.33	KVA
CURRENT AT 208V 3Ø	1265	AMPS

TENANT LOAD ESTIMATION

APPROX. AREA	2650	SQ. FT.
GENERAL LIGHTING PER NEC 220.12	3.5	VA/SQ.FT.
GENERAL LIGHTING WITH CONTINUOUS FACTOR	11.59	KVA
RECEPTACLE	2.65	KVA
MISC.	2.65	KVA
HVAC (HEAT PUMP , 300 SQ.FT./TON)	4.5	KVA
WATER HEATER	4.5	KVA
TOTAL	66.39	KVA
CURRENT AT 208V 3Ø	184	AMPS

PANEL HP — 120/208V, 3 PHASE, 4 WIRE

CKT	DESCRIPTION		KVA	C	G	W	CB	CKT	CKT	CB	W	G	C	KVA	DESCRIPTION		CKT
1	LIGHTS	STAIR B	0.0	1/2	12	12	20	1	2	20	12	12	1/2	0.0	203	LIGHTS	2
3	LIGHTS	STAIR A	0.0	1/2	12	12	20	3	4	20	12	12	1/2	0.0	203	COMMUNICATION	4
5	LIGHTS	LOBBY	0.0	1/2	12	12	20	5	6	20	12	12	1/2	0.0	203	NAC	6
7	LIGHTS	103	0.0	1/2	12	12	20	7	8	20	12	12	1/2	0.0	303	LIGHTS	8
9	LIGHTS	EXTERIOR	0.0	1/2	12	12	20	9	10	20	12	12	1/2	0.0	303	NAC	10
11	REC	103	0.4	1/2	12	12	20	11	12	20	12	12	1/2	0.0	303	COMMUNICATION	12
13	COMMUNICATION		0.5	1/2	12	12	20	13	14	20	12	12	1/2	0.0	ROOFTOP	REC	14
15	FACP		0.5	1/2	12	12	20	15	16	20	12	12	1/2	1.0	ROOFTOP	HP-1	16
17	AREA OF RESCUE		0.4	1/2	12	12	20	17	18	2P	12	--	--	1.0			18
19	LTS/REC	102	0.2	1/2	12	12	20	19	20	15	12	12	1/2	1.2	ROOFTOP	CU-2	20
21	ELEV. CAR	102	0.5	1/2	12	12	20	21	22	2P	12	--	--	1.2			22
23	LTS/REC	ELEV. PIT	0.4	1/2	12	12	20	23	24	30	10	10	3/4	2.2		AH-1,H	24
25	P-1	ELEV. PIT	1.2	1/2	12	12	20	25	26	2P	10	--	--	2.2			26
27	EUH	STAIR A	2.0	3/4	10	10	25	27	28	--	--	--	--	0.0		SPACE ONLY	28
29			2.0	--	--	10	2P	29	30	--	--	--	--	0.0		SPACE ONLY	30
31	REC	EXTERIOR	0.4	1/2	12	12	20	31	32	--	--	--	--	0.0		SPACE ONLY	32
33	SPACE ONLY		0.0	--	--	--	--	33	34	--	--	--	--	0.0		SPACE ONLY	34
35	SPACE ONLY		0.0	--	--	--	--	35	36	--	--	--	--	0.0		SPACE ONLY	36
S1	ELEVATOR		10.6	2	6	2/0	175	S1	S2	--	--	--	--	0.0		SPACE ONLY	S2
	30 HP		10.6	--	--	2/0	3P			--	--	--	--	0.0			
			10.6	--	--	2/0	--			--	--	--	--	0.0			

DESCRIPTION	CONNECTED KVA	DEMAND FACTOR	DEMAND KVA
CONT. LOAD	0.60	125%	0.75
RECEPTACLE	1.26	100%/50%	1.26
MTRS/COOLS	37.88	100%	37.88
HEATS	7.80	100%	7.80
WATER HEATER	0.00	100%	0.00
EQUIPMENT	1.36	100%	1.36
KITCHEN EQUIP.	0.00	65%	0.00
SPECIAL EQ.	0.00	100%	0.00
25% OF LARGEST HVAC/MOTOR			7.92
TOTAL DEMAND			56.97

400 A MINIMUM BUS SIZE
MAIN LUGS ONLY
22 K MINIMUM AIC RATING

SURFACE MOUNTING
NEMA 1 ENCLOSURE
GROUND BAR

NOTES
1. SQUARE D™ NQ WITH SUBFEED BREAKER S1 AND SUFEED SPACE S2.
2.
3.
4.
5.

CONNECTED LOADS	
PHASE A:	16.2 KVA
PHASE B:	15.8 KVA
PHASE C:	16.9 KVA
TOTAL:	48.9 KVA
DEMAND	158 AMP

2 / E2.1 LOAD SUMMARY AND PANEL SCHEDULE

SCALE: NO SCALE

New Shell Building
Heritage Park West
3125 Rogers Road
Wake Forest, North Carolina

ATLANTEC ENGINEERS, P.A.
3201 BLUE RIDGE ROAD, SUITE 113
RALEIGH, NC 27612
(919) 571-111
1505 ST. JAMES PLACE
KINSTON, NC 28504
(252) 527-3336
16227

PROGRESS DRAWING
NOT RELEASED FOR CONSTRUCTION

MAURER ARCHITECTURE
115.5 EAST HARGETT STREET, SUITE 300
RALEIGH, NC 27601
TEL. 919-829-4969 FAX. 919-829-0860

DATE	12.02.16
DR.	SP
CH.	DJW
PROJ. #	16096
REVISIONS	DATE

POWER RISER DIAGRAM
PANEL SCHEDULE

E2.1

16227

LIGHT FIXTURE SCHEDULE

TYPE	DESCRIPTION	CATALOG	ELECTRICAL DATA	NOTES
A	6" SQUARE RECESSED LED CAN 1500 LUMEN	LITHONIA: LDN6SQ-40/15-LS6-AR-MVOLT-EZ10	1500 LUMEN 4000K LED ELECTRONIC DRIVER 19.1 WATTS - 25 VA, 120-277V	
B	DECORATIVE PENDANT	TO BE SELECTED BY ARCHITECT	300W MAX. 300 WATTS - 300 VA, 120V	
C	13" SURFACE LED FIXTURE 1900 LUMEN	LITHONIA: FMML-13-8-40	1900 LUMEN 4000K LED ELECTRONIC DRIVER 28 WATTS - 35 VA, 120V	
D (1)	4 FT. FL STRIP LIGHT 2 - 32W T8	LITHONIA: C-2-32-MVOLT-GEB10IS	(2) 32W ELECTRONIC BALLAST. 64 WATTS - 65 VA, 120/277V	
F	4 FT. WALL MOUNTED LED FIXTURE 4000 LUMEN	LITHONIA: WL4-40L-EZ1-LP840	4000 LUMEN 4000K LED ELECTRONIC DRIVER. 39.5 WATTS - 45 VA, 120-277V	
F/EM	4 FT. WALL MOUNTED LED FIXTURE 4000 LUMEN WITH BATTERY BACKUP	LITHONIA: WL4-40L-EZ1-LP840-EL14	4000 LUMEN 4000K LED ELECTRONIC DRIVER. 39.5 WATTS - 45 VA, 120-277V	
L	WALL MOUNTED VAPOR TIGHT LED 1700 LUMEN	RAB: VXBELED26NDG	1700 LUMEN 4000K LED ELECTRONIC DRIVER. 26 WATTS - 30 VA, 120-277V	
P	DECORATIVE EXTERIOR WALL SCONCE 2000 LUMEN LISTED FOR WET LOCATION AND 0°F	SCOTT: S3858-**-L16-35	2000 LUMEN 3500K LED ELECTRONIC DRIVER. 16 WATTS - 20 VA, 120-277V	** FINISHED PER ARCHITECT INSTRUCTION. FIELD VERIFY MOUNTING HEIGHT WITH ARCHITECT.
W	EXTERIOR WALL MOUNT FIXTURE CUT-FF, WIDE DISTRIBUTION LISTED FOR WET LOCATION AND 0°F 2 SETS OF LED MODULES.	LITHONIA: WST-LED-P2-40K-VW-MVOLT-**	3000 LUMEN 4000K LED ELECTRONIC DRIVER, 25 WATTS - 26 VA, 120-277V	** FINISHED COLOR PER ARCHITECT INSTRUCTION. FIELD VERIFY MOUNTING HEIGHT WITH ARCHITECT.
EG	EMERGENCY LIGHT	LITHONIA: ELMLT-W-LP06VS	1000 LUMEN TOTAL LED 14.2 WATTS - 15 VA, 120/277V	
EGX	EMERGENCY LIGHT WITH EXIT	LITHONIA: LHQM-LED-R	(2) 1.5W LED 9.6V, LED FOR EXIT. 5 WATTS - 5 VA, 120/277V	
EA	'AREA OF RESCUE' ILLUMINATED SIGN WITH BATTERY BACKUP	LITHONIA: LQM-P-W-1-G-120/277-EL-N-SW03	LED FOR SIGN 5 WATTS - 5 VA, 120/277V	

KEY NOTES

(1) PROVIDE WITH QUICK DISCONNECT PER NEC 410.130 (G)(1).

NOTES:

1. SEE ARCHITECTURAL PLAN FOR MOUNTING LOCATION AND HEIGHT. FIELD COORDINATE MOUNTING HEIGHT WITH ARCHITECT IF NOT SHOWN ON ARCHITECTURAL PLAN.
2. E.C. SHALL SUBMIT CATALOG TO ARCHITECT FOR APPROVAL PRIOR PURCHASE ANY. FINISH COLOR/TRIM SUBJECT TO BE CHANGED PER ARCHITECT.
3. FIELD VERIFY FLUORESCENT LAMP COLOR WITH ARCHITECT PRIOR PURCHASE ANY.

1 / E2.2 FIXTURE SCHEDULE

SCALE: NO SCALE

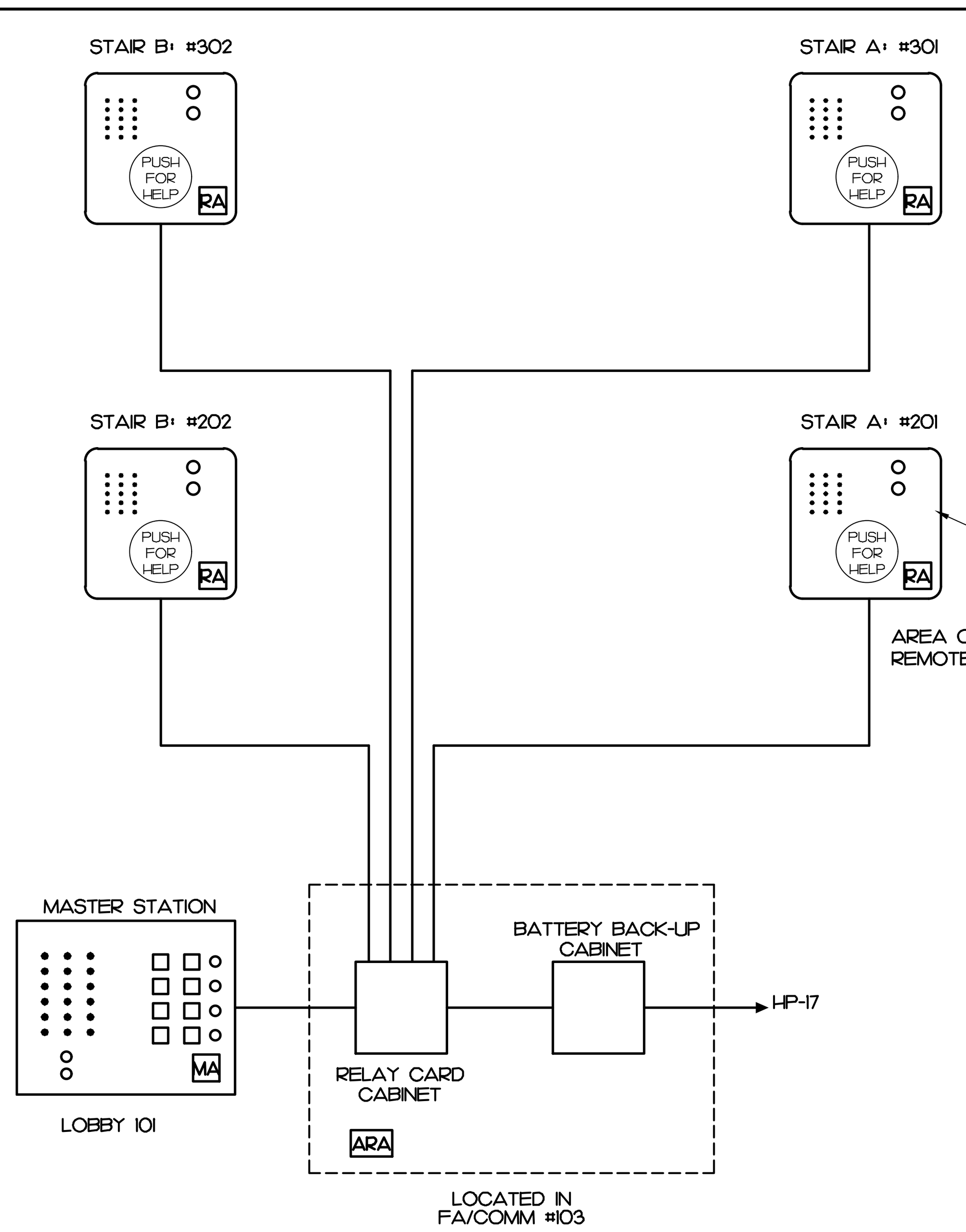

NOTES:

1. SEE FLOOR PLANS FOR QUANTITY AND LOCATION OF ALL EQUIPMENT.
2. ALL WIRING SHALL BE PER MANUFACTURERS SPECIFICATIONS.
3. THE SYSEM SHALL COMPLY WITH SECTIONS 4.3.11.4 AND 4.3.11.5 OF THE AMERICANS WITH DISABILITIES ACT.
4. ALL WIRING SHALL BE IN CONDUIT.
5. AREA OF RESCUE ASSISTANCE SYSTEM SHALL BE UL LISTED FOR USE AS AN AREA OF RESCUE ASSISTANCE SYSTEM.
6. AREA OF RESUCE ASSISTANCE SYSTEM INSTALLATION SHALL BE BY A LICENSED CONTRACTOR.
7. SYSTEM WIRING SHALL BE IN ACCORDANCE WITH GOOD ENGINEERING PRACTICES AS ESTABLISHED BY EIA AND NEC. WIRING SHALL MEET ALL ESTABLISHED STATE AND LOCAL ELECTRICAL CODES. ALL WIRING SHALL TEST FREE FROM SHORTS AND GROUNDED AS SPECIFIED.
8. MASTER STATION AND AREA STATION MOUNTING SHALL BE IN ACCORDANCE WITH ADA RECOMMENDATIONS AND SPECIFICATIONS.
9. AN ILLUMINATED SIGN DESIGNATED AREA RESCUE STATION SHALL BE INSTALLED AT ABOVE EACH LOCATION WITH MASTER OR REMOTE STATION AS SHOWN IN THE DRAWINGS.
10. MANUFACTURER CONTACT INFORMATION:
    HOUSING DEVICES, INC.
    407 R. MYSTIC AVE., MEDFORD, MA 02155
    TEL. (800) 392-5200
11. THE SYSTEM SHALL BE AN "ADA-100-ECS" BY HOUSING DEVICES, INC.
12. ALL PARTS AND ACCESSORIES SHALL BE MANUFACTURED OR SPECIFIED BY HOUSING DEVICES, INC. TO BE USED WITH "ADA-100-ECS" SYSTEM. EQUIVALENT SYSTEMS ARE ACCEPTABLE.
13. REMOTE STATION AT STAIR 1: #203 AND STAIR 3: #204 SHALL BE WEATHERPROOF TYPE.

2 / E2.2 AREA OF RESCUE ASSITANCE DIAGRAM

SCALE: NOT TO SCALE

16227

SYSTEM NO. CAJ1044

F RATING - 2, 3 AND 4 HOUR (SEE ITEMS 2A AND 4)
T RATING - 0 HOUR
L RATING AT AMBIENT - 2 CFM/SQ. FT.
L RATING AT 400 F - LESS THAN 1 CFM/SQ. FT.
W RATING - CLASS 1 (SEE ITEM 4)

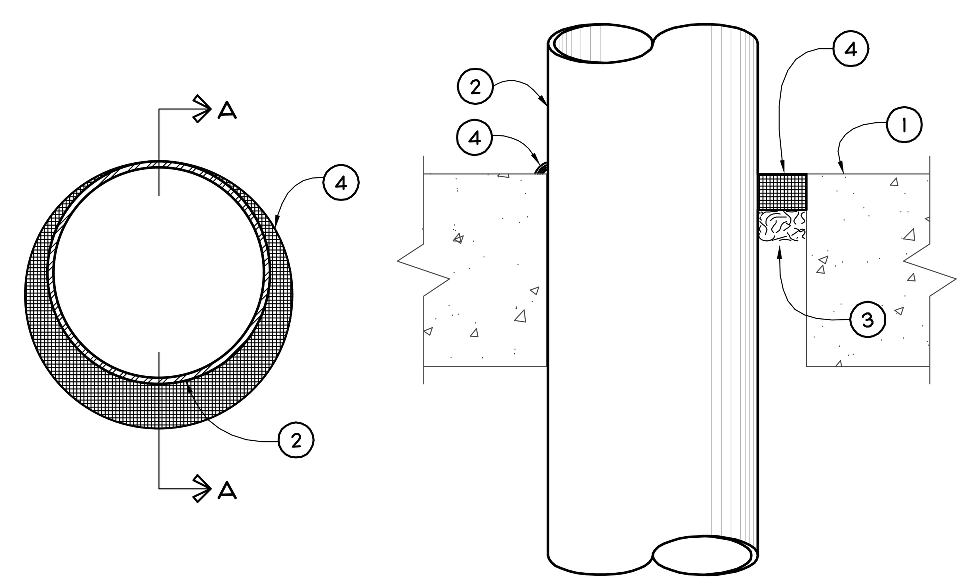

SECTION A - A

(1) **FLOOR OR WALL ASSEMBLY** - LIGHTWEIGHT OR NORMAL WEIGHT (100-150 PCF) CONCRETE. EXCEPT AS NOTED IN TABLE UNDER ITEM 4, MINIMUM THICKNESS OF SOLID CONCRETE FLOOR OR WALL ASSEMBLY IS 4 1/2". FLOOR MAY ALSO BE CONSTRUCTED OF ANY MINIMUM 6" THICK UL CLASSIFIED HOLLOW CORE **PRECAST CONCRETE UNITS***. WHEN FLOOR IS CONSTRUCTED OF HOLLOW CORE PRECAST CONCRETE UNITS, PACKING MATERIAL (ITEM 3) AND CAULK FILL MATERIAL (ITEM 4) TO BE INSTALLED SYMMETRICALLY ON BOTH SIDES OF FLOOR, FLUSH WITH FLOOR SURFACE. WALL ASSEMBLY MAY ALSO BE CONSTRUCTED OF ANY UL CLASSIFIED **CONCRETE BLOCKS***. MAXIMUM DIAMETER OF OPENING IS IN SOLID LIGHTWEIGHT OR NORMAL WEIGHT CONCRETE. FLOOR IS 32" MAXIMUM DIAMETER OF OPENING IN FLOOR CONSTRUCTED OF HOLLOW-CORE PRECAST CONCRETE UNITS IS 7". SEE **CONCRETE BLOCKS** (CAZT) AND **PRECAST CONCRETE UNITS** (CFTV) CATEGORIES IN THE FIRE RESISTANCE DIRECTORY FOR NAMES OF MANUFACTURERS.

(1A) **STEEL SLEEVE** (OPTIONAL, NOT SHOWN) - MAXIMUM 15" ID (OR SMALLER) SCHEDULE 10 (OR HEAVIER) STEEL SLEEVE CAST OR GROUTED INTO FLOOR OR WALL ASSEMBLY. SLEEVE MAY EXTEND A MAXIMUM OF 2" ABOVE TOP OF FLOOR OR BEYOND EITHER SURFACE OF WALL. MAXIMUM 16" ID (OR SMALLER) MINIMUM 0.028 WALL THICKNESS (OR HEAVIER) GALVANIZED STEEL SLEEVE CAST OR GROUTED INTO FLOOR OR WALL ASSEMBLY. SLEEVE MAY EXTEND A MAXIMUM OF 1/2" BEYOND EITHER SURFACE OF FLOOR OR WALL.

(2) **THROUGH PENETRANTS** - ONE METALLIC PIPE, CONDUIT OR TUBING TO BE INSTALLED EITHER CONECTRICALLY OR ECCENTRICALLY WITHIN THE FIRESTOP SYSTEM. MAXIMUM ANNULAR SPACE BETWEEN PIPE, CONDUIT OR TUBING AND EDGE OF THROUGH OPENING OR SLEEVE IS DEPENDENT ON THE PARAMETERS SHOWN IN ITEM 4. MINIMUM ANNULAR SPACE BETWEEN PIPE OR CONDUIT AND EDGE OF THROUGH OPENING IS 0" (POINT CONTACT). PIPE CONDUIT OR TUBING TO BE RIGIDLY SUPPORTED ON BOTH SIDES OF FLOOR OR WALL ASSEMBLY. THE FOLLOWING TYPES AND SIZES OF METALLIC PIPES, CONDUITS OR TUBING MAY BE USED:

A. **STEEL PIPE** - NOMINAL 30" DIAMETER (OR SMALLER) SCHEDULE 10 (OR HEAVIER) STEEL PIPE.
B. **IRON PIPE** -NOMINAL 30" DIAMETER (OR SMALLER) CAST OR DUCTILE IRON PIPE.
C. **CONDUIT** - NOMINAL 6" DIAMETER (OR SMALLER) RIGID STEEL CONDUIT.
D. **CONDUIT** - NOMINAL 4" DIAMETER (OR SMALLER) STEEL ELECTRICAL METALLIC TUBING.
E. **COPPER** - TUBING NOMINAL 6" DIAMETER (OR SMALLER) TYPE L (OR HEAVIER) COPPER TUBE.
F. **COPPER PIPE** - NOMINAL 6" DIAMETER (OR SMALLER) REGULAR (OR HEAVIER) COPPER PIPE.

(3) **PACKING MATERIAL** - POLYETHYLENE BACKER ROD OR NOMINAL 1" THICKNESS OF TIGHTLY-PACKED MINERAL WOOL BATT OR GLASS FIBER INSULATION FIRMLY PACKED INTO OPENING AS A PERMANENT FORM. PACKING MATERIAL TO BE RECESSED FROM TOP SURFACE OF FLOOR OR FROM BOTH SURFACES OF WALL AS REQUIRED TO ACCOMMODATE THE REQUIRED THICKNESS OF CAULK FILL MATERIAL (ITEM 4).

(4) **FILL, VOID OR CAVITY MATERIAL* - CAULK OR SEALANT** - APPLIED TO FILL THE ANNULAR SPACE FLUSH WITH TOP SURFACE OF FLOOR. IN WALL ASSEMBLIES, REQUIRED CAULK THICKNESS TO BE INSTALLED SYMMETRICALLY ON BOTH SIDES OF WALL, FLUSH WITH WALL SURFACE. AT POINT CONTACT LOCATION BETWEEN PENETRANT AND SLEEVE OR BETWEEN PENETRANT AND CONCRETE, A MINIMUM 1/4" DIAMETER BEAD OF CAULK SHALL BE APPLIED AT TOP SURFACE OF FLOOR AND AT BOTH SURFACES OF WALL. THE HOURLY F RATINGS AND THE MINIMUM REQUIRED CAULK THICKNESSES ARE DEPENDENT UPON A NUMBER OF PARAMETERS, AS SHOWN IN THE FOLLOWING TABLE:

MINIMUM FLOOR OR WALL THICKNESS INCHES	NOMINAL PIPE TUBE OR CONDUIT DIAMETER INCHES	MAXIMUM ANNULAR SPACE INCHES	MINIMUM CAULK THICKNESS INCHES	F RATING
2 1/2	1/2 - 12	1 3/8	1/2	2
2 1/2	1/2 - 12	3 1/4	1	2
4 1/2	1/2 - 6	1 3/8	1/4(a)	2
4 1/2	1/2 - 12	1 1/4	1/2	3
4 1/2	1/2 - 20	2	1	3
4 1/2	1/2 - 20	2	1	3
4 1/2	1/2 - 12	3 1/4	1	3
4 1/2	22 - 30	2	2	3
5 1/2	1/2 - 6	1 3/8	1 (b)	4

(a) MINIMUM 2" THICKNESS OF MINERAL WOOL BATT INSULATION REQUIRED IN ANNULAR SPACE.
(b) MINIMUM 1" THICKNESS OF MINERAL WOOL BATT INSULATION REQUIRED IN ANNULAR SPACE ON BOTH SIDES OF FLOOR OR WALL ASSEMBLY. MINIMUM 1" THICKNESS OF CAULK TO BE INSTALLED FLUSH WITH EACH SURFAC OF FLOOR OR WALL ASSEMBLY.

3M COMPANY - CP 25WB + CAULK OR FB-3000 WT SEALANT. (THE W RATING APPLIES ONLY WHEN FB-3000 WT SEALANT IS USED).

*BEARING THE UL CLASSIFICATION MARKING

3 / E2.2 FIRE PENETRATION (TYPICAL)

SCALE: NOT TO SCALE

SYSTEM NO. WL1001

F RATINGS - 1, 2, 3 AND 4 HOUR (SEE ITEMS 2 AND 3)
T RATINGS - 0, 1, 2, 3 AND 4 HOUR (SEE ITEM 3)
L RATING AT AMBIENT - LESS THAN 1 CFM/SQ FT
L RATING AT 400 F - LESS THAN 1 CFM/SQ FT

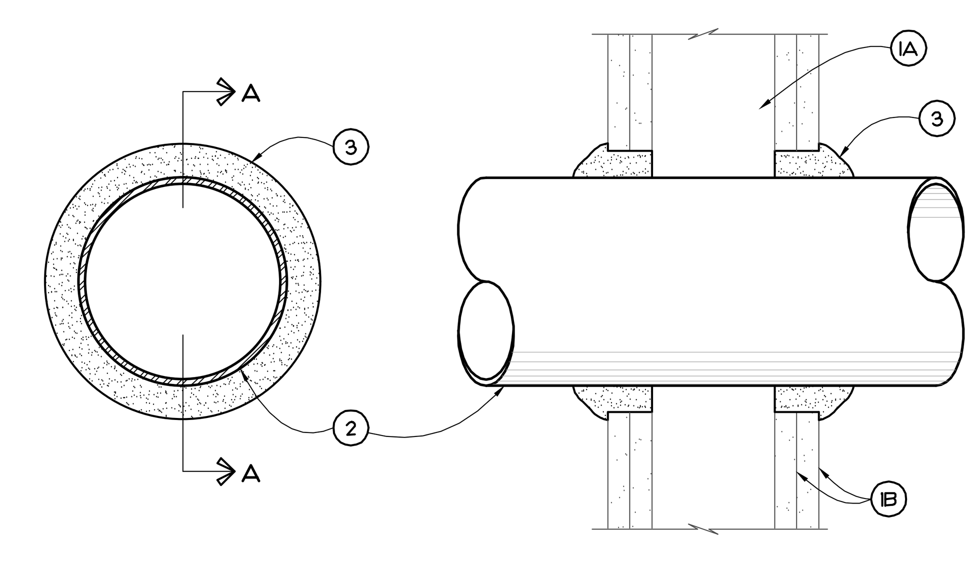

SECTION A - A

(1) **WALL ASSEMBLY** - THE 1, 2, 3 OR 4 HOUR FIRE-RATED GYPSUM WALLBOARD/STUD WALL ASSEMBLY SHALL BE CONSTRUCTED OF THE MATERIALS AND IN THE MANNER DESCRIBED IN THE INDIVIDUAL U300 OR U400 SERIES WALL OR PARTITION DESIGNS IN THE UL FIRE RESISTANCE DIRECTORY AND SHALL INCLUDE THE FOLLOWING CONSTRUCTION FEATURES:

A. **STUDS** - WALL FRAMING MAY CONSIST OF EITHER WOOD STUDS (MAXIMUM 2 HOUR FIRE RATED ASSEMBLIES) OR STEEL CHANNEL STUDS. WOOD STUDS TO CONSIST OF NOMINAL 2" x 4" LUMBER SPACED 16" ON CENTER WITH NOMINAL 2" x 4" LUMBER END PLATES AND CROSS BRACES. STEEL STUDS TO BE MINIMUM 3 5/8" WIDE x 1 3/8" DEEP CHANNELS SPACED MAXIMUM 24" ON CENTER.
B. **GYPSUM BOARD*** - NOMINAL 1/2" OR 5/8" THICK, 4' WIDE WITH SQUARE OR TAPERED EDGES. THE GYPSUM WALLBOARD TYPE, THICKNESS, NUMBER OF LAYERS, FASTENER TYPE AND SHEET ORIENTATION SHALL BE AS SPECIFIED IN THE INDIVIDUAL U300 OR U400 SERIES DESIGN IN THE UL FIRE RESISTANCE DIRECTORY. MAXIMUM DIAMETER OF OPENING IS 26".

(2) **THROUGH PENETRANT** - ONE METALLIC PIPE, CONDUIT OR TUBING INSTALLED EITHER CONCENTRICALLY OR ECCENTRICALLY WITHIN THE FIRESTOP SYSTEM. THE ANNULAR SPACE BETWEEN PIPE, CONDUIT OR TUBING AND PERIPHERY OF OPENING SHALL BE MINIMUM OF 0" (POINT CONTACT) TO MAXIMUM 2" PIPE, CONDUIT OR TUBING TO BE RIGIDLY SUPPORTED ON BOTH SIDES OF WALL ASSEMBLY. THE FOLLOWING TYPES AND SIZES OF METALLIC PIPES, CONDUITS OR TUBING MAY BE USED:

A. **STEEL PIPE** - NOMINAL 24" DIAMETER (OR SMALLER) SCHEDULE 10 (OR HEAVIER) STEEL PIPE.
B. **IRON PIPE** - NOMINAL 24" DIAMETER (OR SMALLER) SERVICE WEIGHT (OR HEAVIER) CAST IRON SOIL PIPE, NOMINAL 12" DIAMETER (OR SMALLER) OR CLASS 50 (OR HEAVIER) DUCTILE IRON PRESSURE PIPE.
C. **CONDUIT** - NOMINAL 6" DIAMETER (OR SMALLER) STEEL CONDUIT OR NOMINAL 4" DIAMETER (OR SMALLER) STEEL ELECTRICAL METALLIC TUBING.
D. **COPPER TUBING** - NOMINAL 6" DIAMETER (OR SMALLER) TYPE L (OR HEAVIER) COPPER TUBING.
E. **COPPER PIPE** - NOMINAL 6" DIAMETER (OR SMALLER) REGULAR (OR HEAVIER) COPPER PIPE.
F. **THROUGH PENETRATING PRODUCT* - FLEXIBLE METAL PIPING** - THE FOLLOWING TYPES OF STEEL FLEXIBLE METAL GAS PIPING MAY BE USED:
   1. NOMINAL 2" DIAMETER (OR SMALLER) STEEL FLEXIBLE METAL GAS PIPING. PLASTIC COVERING ON PIPING MAY OR MAY NOT BE REMOVED ON BOTH SIDES OF FLOOR OR WALL ASSEMBLY.
      OMEGA FLEX INC
   2. NOMINAL 1" DIAMETER (OR SMALLER) STEEL FLEXIBLE METAL GAS PIPING. PLASTIC COVERING ON PIPING MAY OR MAY NOT BE REMOVED ON BOTH SIDES OF FLOOR OR WALL ASSEMBLY.
      TITEFLEX CORP
      A BUNDY CO
   3. NOMINAL 1" DIAMETER (OR SMALLER) STEEL FEXIBLE METAL GAS PIPING. PLASTIC COVERING ON PIPING MAY OR MAY NOT BE REMOVED ON BOTH SIDES OF FLOOR OR WALL ASSEMBLY.
      WARD MFG INC

(3) **FILL, VOID OR CAVITY MATERIAL* - CAULK OR SEALANT** - MINIMUM 5/8", 1 1/4", 1 7/8" AND 2 1/2" THICKNESS OF CAULK FOR 1, 2, 3 AND 4 HOUR RATED ASSEMBLIES, RESPECTIVELY, APPLIED WITHIN ANNULUS, FLUSH WITH BOTH SURFACES OF WALL. MINIMUM 1/4" DIAMETER BEAD OF CAULK APPLIED TO GYPSUM BOARD/PENETRANT INTERFACE AT POINT CONTACT LOCATION ON BOTH SIDES OF WALL. THE HOURLY F RATING OF THE FIRESTOP SYSTEM IS DEPENDENT UPON THE HOURLY FIRE RATING OF THE WALL ASSEMBLY IN WHICH IT IS INSTALLED, AS SHOWN IN THE FOLLOWING TABLE. THE HOURLY T RATING OF THE FIRESTOP SYSTEM IS DEPENDENT UPON THE TYPE OR SIZE OF THE PIPE OR CONDUIT AND THE HOURLY FIRE RATING OF THE WALL ASSEMBLY IN WHICH IT IS INSTALLED, AS TABULATED BELOW:

MAXIMUM PIPE OR CONDUIT DIAMETER INCHES	F RATING HOUR	T RATING HOUR
1	1 OR 2	0+, 1 OR 2
1	3 OR 4	3 OR 4
4	1 OR 2	0
6	3 OR 4	0
12	1 OR 2	0

+WHEN COPPER PIPE IS USED, T RATING IS 0 HOUR.

3M COMPANY - CP 25WB+ CAULK OR FB-3000 WT SEALANT.

*BEARING THE UL CLASSIFICATION MARKING

4 / E2.2 FIRE PENETRATION (TYPICAL)

SCALE: NOT TO SCALE

New Shell Building
Heritage Park West
3125 Rogers Road
Wake Forest, North Carolina

ATLANTEC ENGINEERS, PA
3221 BLUE RIDGE ROAD, SUITE 113
RALEIGH, NC 27612
(919) 571-1111
1505 ST. JAMES PLACE
KINSTON, NC 28504
(252) 527-3336
16227

PROGRESS DRAWING NOT RELEASED FOR CONSTRUCTION

MAURER ARCHITECTURE
115.5 EAST HARGETT STREET, SUITE 300
RALEIGH, NC 27601
TEL. 919-829-4969 FAX. 919-829-0860

DATE	12.02.16
DR.	SP
CH.	DJW
PROJ. #	16096
REVISIONS	DATE

FIXTURE SCHEDULE DETAILS

E2.2

SYMBOL LEGEND

SYMBOL	DESCRIPTION	REMARKS
	SQUARE RECESSED CAN LIGHT FIXTURE - LETTER DESIGNATES TYPE	SEE FIXTURE SCHED.
	PENDANT/SURFACE MOUNT FIXTURE - LETTER DESIGNATES TYPE	SEE FIXTURE SCHED.
	LINEAR WALL MOUNT FIXTURE - LETTER DESIGNATES TYPE	SEE FIXTURE SCHED.
	LINEAR STRIP FIXTURE - LETTER DESIGNATES TYPE	SEE FIXTURE SCHED.
	WALL MOUNT LIGHT FIXTURE - LETTER DESIGNATES TYPE	SEE FIXTURE SCHED.
	EXTERIOR WALL LIGHT FIXTURE - LETTER DESIGNATES TYPE	SEE FIXTURE SCHED.
	SPECIAL SIGN - CONNECT UNSWITCHED	SEE FIXTURE SCHED.
	EMERGENCY WITH EXIT LIGHT - CONNECT UNSWITCHED	SEE FIXTURE SCHED.
	BATTERY BACKUP EMERGENCY LIGHT - CONNECT UNSWITCHED	SEE FIXTURE SCHED.
PC	PHOTOCELL, 120/277VAC, 1800VA BALLAST LOAD	TORK: 2107
EP	EMERGENCY POWER UNIT (INVERTER) FOR EXTERIOR EMERGENCY LIGHT. 120V INPUT, 120V OUTPUT, 110W WITH 90 MIN. BACKUP TIME.	EELP: PS-110HP
	LIGHT FIXTURE ON UNSWITCHED CIRCUIT FOR NIGHT LIGHT. THE SHADE DESIGNATED THE NIGHT LIGHT.	SEE FIXTURE SCHED.
S	SINGLE POLE TOGGLE SWITCH. MOUNT 42" A.F.F. UNLESS NOTED OTHERWISE.	HUBBELL CS1221-** WITH NPJ1 COVER PLATE
S_3	THREE WAY TOGGLE SWITCH. MOUNT 42" A.F.F. UNLESS NOTED OTHERWISE.	HUBBELL CS1223-** WITH NPJ1 COVER PLATE
S_M	WALL MOUNTED OCCUPANCY SENSOR SWITCH, PASSIVE INFRARED MOUNT 42" A.F.F. UNLESS NOTED OTHERWISE. 800W/120VAC OR 1200W/277VAC	WATTSTOPPER PW-100-** NPJ26 COVER PLATE
	SPECIFICATION GRADE DUPLEX RECEPTACLE. MOUNT 16" A.F.F. UNLESS OTHERWISE NOTED.	HUBBELL CR5362-** WITH NPJ8 COVER PLATE
GFI	SPECIFICATION GRADE TAMPER RESISTANT GFCI DUPLEX RECEPTACLE. RECEPTACLE - MOUNT 16" A.F.F. UNLESS NOTED OTHERWISE.	HUBBELL GFTR20-** WITH NPJ26 COVER PLATE
WP	SPECIFICATION GRADE TAMPER RESISTANT, WEATHER RESISTANT AND GFCI DUPLEX RECEPTACLE WITH IN-USE WEATHER PROOF COVER. MOUNT 16" A.F.F. UNLESS OTHERWISE NOTED.	HUBBELL GFTR20-** WITH WP26M COVER PLATE
W	SPECIFICATION GRADE DUPLEX RECEPTACLE. WITH IN-USE WEATHER PROOF COVER. MOUNT 16" A.F.F. UNLESS OTHERWISE NOTED.	HUBBELL CR5362-** WITH WP26M COVER PLATE
J	JUNCTION BOX SIZED PER N.E.C.	
	DISCONNECT SWITCH SEE PLANS FOR SIZE AND TYPE	SQUARE D HEAVY DUTY
	NEW CONCEALED WIRING	PER N.E.C.
	UNSWITCHED LIGHTING CONDUCTOR	PER N.E.C.
	HOME RUN TO PANEL BOARD NUMBERS OF ARROW INDICATE CIRCUITS	PER N.E.C.
	120/208V 3Ø, 4W PANEL BOARD - SEE PANEL SCHEDULES	SQUARE D NQ
M	METER BANK	SEE POWER RISER
	COMMUNICATION OUTLET - MOUNT 16" A.F.F. UNLESS OTHERWISE NOTED STUB 3/4" CONDUIT TO COMMUNICATION BOARD. OUTLET, COVER PLATE AND WIRING BY OTHERS.	SINGLE GANG BOX HUBBELL NPJ13 COVER PLATE
TCBB	COMMUNICATION BACKBOARD: 3/4" THICK FIREPROOFED PLYBOARD MOUNTED TO WALL SEE NOTE ON PLAN.	
RA	AREA OF RESCUE ASSISTANCE: MASTER UNIT. MOUNT 42" A.F.F. UNLESS NOTED OTHERWISE.	SEE DETAIL 2/E2.2
MA	AREA OF RESCUE ASSISTANCE: REMOTE STATION UNIT MOUNT 42" A.F.F. UNLESS NOTED OTHERWISE.	SEE DETAIL 2/E2.2
ARA	AREA OF RESCUE ASSISTANCE: CONTROL UNIT	SEE DETAIL 2/E2.2
FACP	FIRE ALARM CONTROL PANEL, SURFACE MOUNTED. ADDRESSABLE.	SEE FIRE ALARM PLAN.
NAC	FIRE ALARM NOTIFICATION APPLIANCE POWER CABINET SURFACE MOUNTED.	SEE FIRE ALARM PLAN.
	1 HOUR WALL.	
A.F.C.	ABOVE FINISHED CEILING	
A.F.F.	ABOVE FINISHED FLOOR - NOTE ALL MOUNTING DIMENSIONS GIVEN ARE TO THE BOTTOM OF THE OUTLET BOX	
B.F.F.	BELOW FINISHED FLOOR	
B.F.G.	BELOW FINISHED GRADE	

NOTE:

1. E.C. SHALL SUBMIT CATALOG SHEETS FOR COLOR AND MATERIAL APPROVAL OF ALL SWITCH, RECEPTACLE AND WALL PLATE TO ARCHITECT PRIOR PURCHASING ANY.

16227

GENERAL NOTES

1. THE CONTRACTOR SHALL REFER TO THE ARCHITECTURAL PLANS FOR FLOOR PLAN DIMENSIONS. DO NOT SCALE THESE DRAWINGS.
2. THE ELECTRICAL CONTRACTOR SHALL COORDINATE ANY AND ALL WORK WITH OTHER TRADES INVOLVED IN THE PROJECT, PRIOR TO THE INSTALLATION OF HIS EQUIPMENT SO AS TO AVOID CONFLICTS DURING CONSTRUCTION AND TO ALLOW FOR OPTIMUM MAINTENANCE AND WORKING SPACE.
3. USE OF THE CONDUIT SYSTEM FOR EQUIPMENT GROUNDING SHALL NOT BE ACCEPTABLE. A SEPARATE GREEN GROUND WIRE SHALL BE RUN WITH THE CIRCUIT CONDUCTORS IN EACH CONDUIT.
4. ALL BREAKER SIZES, SHOWN FOR MECHANICAL EQUIPMENT, SHALL BE VERIFIED BEFORE THE PURCHASE OR INSTALLATION OF SAID EQUIPMENT, WITH THE EQUIPMENT SUPPLIER AND THE MECHANICAL CONTRACTOR.
5. ALL WORK AND MATERIAL SHALL BE PROVIDED IN ACCORDANCE WITH THE STATE, LOCAL AND NATIONAL CODES AND ORDINANCES.
6. EACH CONTRACTOR SHALL PROVIDE HIS OWN SUPPORT OF ALL DEVICES AND EQUIPMENT PROVIDED BY HIM AND SHALL SUPPORT SUCH EQUIPMENT PER APPROVED GOVERNING CODES OR PER APPROVAL OF THE ENGINEER. UNACCEPTABLE WORKMANSHIP OR MATERIALS SHALL BE REPLACED AT THE REQUEST OF THE ENGINEER AT THE CONTRACTOR'S EXPENSE.
7. THE MOUNTING HEIGHTS AND LOCATIONS OF ALL WALL MOUNTED OUTLETS AND JUNCTION BOXES SHALL BE REVIEWED AND COORDINATED WITH THE ARCHITECT, PRIOR TO INSTALLATION FOR USE WITH THE ACTUAL EQUIPMENT, CASEWORK, AND MILLWORK TO BE FURNISHED.
8. THE ELECTRICAL CONTRACTOR SHALL PROVIDE ALL NECESSARY DISCONNECTS, SWITCHES, AND RECEPTACLES UNDER THE ELECTRICAL BID AND SHALL INCLUDE ALL NECESSARY CIRCUITS TO AND FINAL CONNECTIONS TO THE EQUIPMENT PROVIDED BY ALL SUPPLIERS. SEE DETAILS FOR CONNECTION TO EQUIPMENT PROVIDED BY MECHANICAL AND PLUMBING CONTRACTORS
9. PENETRATION:
   - WHERE ELECTRICAL EQUIPMENT PENETRATES RATED WALLS AND CEILINGS, EXTERIOR WALLS, THEY SHALL BE PROPERLY SEALED PER APPROVED UL METHODS.
   - WHERE ELECTRICAL EQUIPMENT PENETRATES EXTERIOR WALLS, THEY SHALL BE PROPERLY SEALED WITH METHODS APPROVED BY THE ENGINEER. SUBMIT DETAIL OF PROPOSED SEALING METHODS.
10. ALL PERMITS AND INSPECTION FEES SHALL BE SECURED AND PAID BY THE ELECTRICAL CONTRACTOR.
11. ALL WORK SHALL BE PERFORMED BY A LICENSED ELECTRICAL CONTRACTOR.
12. THE CONTRACTOR SHALL PROVIDE COMPLETE UPDATED TYPEWRITTEN PANEL SCHEDULES FOR ALL PANELBOARDS.
13. AS BUILT DRAWINGS SHALL BE GIVEN TO THE OWNER AT THE COMPLETION OF THE PROJECT.
14. THE CONTRACTOR SHALL VERIFY THE CEILING TYPES WITH THE GENERAL CONTRACTOR PRIOR TO THE PURCHASE OF ANY LIGHT FIXTURES SO THAT THE PROPER TRIM WILL BE PROVIDED FOR ALL FIXTURES. ANY DIFFERENCES WILL BE THE RESPONSIBILITY OF THIS CONTRACTOR.
15. ALL WIRE SIZES INDICATED ON THE PANEL SCHEDULES ARE BASED ON 75 DEGREE COPPER THHN/THWN WIRE. ALL WIRE TERMINALS AND EQUIPMENT SHALL BE LISTED AND APPROVED FOR 75°C. ONLY THWN-2 WIRE SHALL BE INSTALLED IN WET AND EXTERIOR LOCATION.
16. MINIMUM CONDUIT SIZE SHALL BE 1/2" AND MINIMUM WIRE SIZE SHALL BE #12 AWG.
17. METAL-CLAD CABLE (TYPE MC) AND ARMORED CABLE (TYPE AC) ARE ACCEPTABLE WIRING METHOD SUBJECT TO RESTRICTIONS OF THE NEC. TYPES "MC" OR "AC" CABLE SHALL NOT BE USED WHEN PENETRATING RATED WALLS.
18. THE MAXIMUM NUMBER OF HOMERUNS IN A CONDUIT SHALL NOT EXCEED THREE (3). BREAKERS FEEDING CIRCUITS WITH SHARED NEUTRAL SHALL BE SWITCHED TOGETHER.
19. WHERE OUTLETS ARE SHOWN BACK TO BACK ON RATED WALLS, STAGGER OUTLETS SO THAT THEY ARE SEPARATED BY A MINIMUM OF 24".
20. ALL DISCONNECTS SHALL HAVE SEPARATE NEUTRAL AND GROUND BARS.
21. ALL PANELS SHALL BE THREE PHASE, FOUR WIRE UNLESS OTHERWISE NOTED.
22. BOXES AND CONDUITS SHALL NOT BE INSTALLED RECESSED IN A 3-HOUR OR HIGHER RATED WALL. WHEN OUTLETS ARE INDICATED ON THESE WALLS, FIELD COORDINATE CONDUIT AND BOX INSTALLATION.
23. FOR ALL RECEPTACLES LOCATED ABOVE COUNTER TOP, MOUNTING HEIGHT SHALL COMPLY WITH ANSI A117.1, SECTION 308. E.C. SHALL FIELD VERIFY CASEWORK DETAIL WITH ARCHITECT PRIOR TO ROUGH-IN.
24. THE ELECTRICAL CONTRACTOR SHALL FIELD COORDINATE THE INSTALLATION OF THE NEW UNDERGROUND ELECTRICAL SERVICE WITH THE LOCAL UTILITY. THE OWNER SHALL PAY ALL CHARGES FOR THE INSTALLATION OF THE NEW UNDERGROUND UTILITY SERVICE.
25. THE ELECTRICAL CONTRACTOR SHALL FIELD COORDINATE THE LOCATION OF HIS TELEPHONE CONDUIT STUB OUTS WITH THE LOCAL TELEPHONE COMPANY PRIOR TO HIS INSTALLING ANY CONDUITS.

2012 NORTH CAROLINA ENERGY CODE

ELECTRICAL SYSTEM AND EQUIPMENT
METHOD OF COMPLIANCE: PRESCRIPTIVE

	LIGHTING SCHEDULE:			
LAMP TYPE REQUIRED:	FLUORESCENT T8/T5	LED	CFL	INCAN
NUMBER OF LAMPS:	2	MODULE	N/A	N/A
BALLAST TYPE USED:	ELECTRONIC	ELECTRONIC	N/A	N/A
NUMBER OF BALLASTS:	1	1	N/A	N/A
TOTAL WATTAGE PER FIXTURE:	64	75 / 47 / 24 / 19 / 14	N/A	N/A

	SPECIFIED	ALLOWED BY CODE
INTERIOR WATTAGE		
LOBBY		219
STAIRS		983
ELECT/MECH		228
TOTAL	1070	1287 **
EXTERIOR WATTAGE	ZONE 3	
ALLOWANCE	57	600

NOTES:

1. ** PER SECTION 506.2.2, THE WHOLE AREA ALLOWED BY CODE IS REQUIRED TO BE 10% LOWER THAN THOSE IN TABLE 505.5.2.
   - VALUE PER TABLE 505.5.2: 1430 WATTS
   - VALUE PER SECTION 506.2.2: 1287 WATTS

   TYPE 'D' FIXTURES ARE USED IN UNFURNISHED SPACE FOR TEMPORARY USED AND ARE NOT INCLUDED IN THIS CALCULATION.
2. ALL EXTERIOR LIGHTS:

   2.1 CONTROLLED BY PHOTOCELL THAT WILL NOT INTENDED TO BE ON FOR 24 HOUR OPERATION.

DESIGNER STATEMENT:
TO THE BEST OF MY KNOWLEDGE AND BELIEF, THE DESIGN OF THIS BUILDING COMPLIES WITH THE ELECTRICAL SYSTEM AND EQUIPMENT REQUIREMENTS OF THE NORTH CAROLINA STATE BUILDING CODE, 2012 - ENERGY.

SIGNED: ____________________

NAME: DAVID J. WHITNEY, P.E.
TITLE: ENGINEER

New Shell Building
Heritage Park West
3125 Rogers Road
Wake Forest, North Carolina

ATLANTEC
ENGINEERS, PA
3221 BLUE RIDGE ROAD, SUITE 113
RALEIGH, NC 27612
(919) 571-1111
1505 ST. JAMES PLACE
KINSTON, NC 28504
(252) 527-3336
16227

PROGRESS DRAWING
NOT RELEASED FOR CONSTRUCTION

MAURER ARCHITECTURE
115.5 EAST HARGETT STREET, SUITE 300
RALEIGH, NC 27601
TEL. 919-829-4969 FAX. 919-829-0860

DATE	12.02.16
DR.	SP
CH.	DJW
PROJ. #	16096
REVISIONS	DATE

LEGEND
NOTES

E3.1

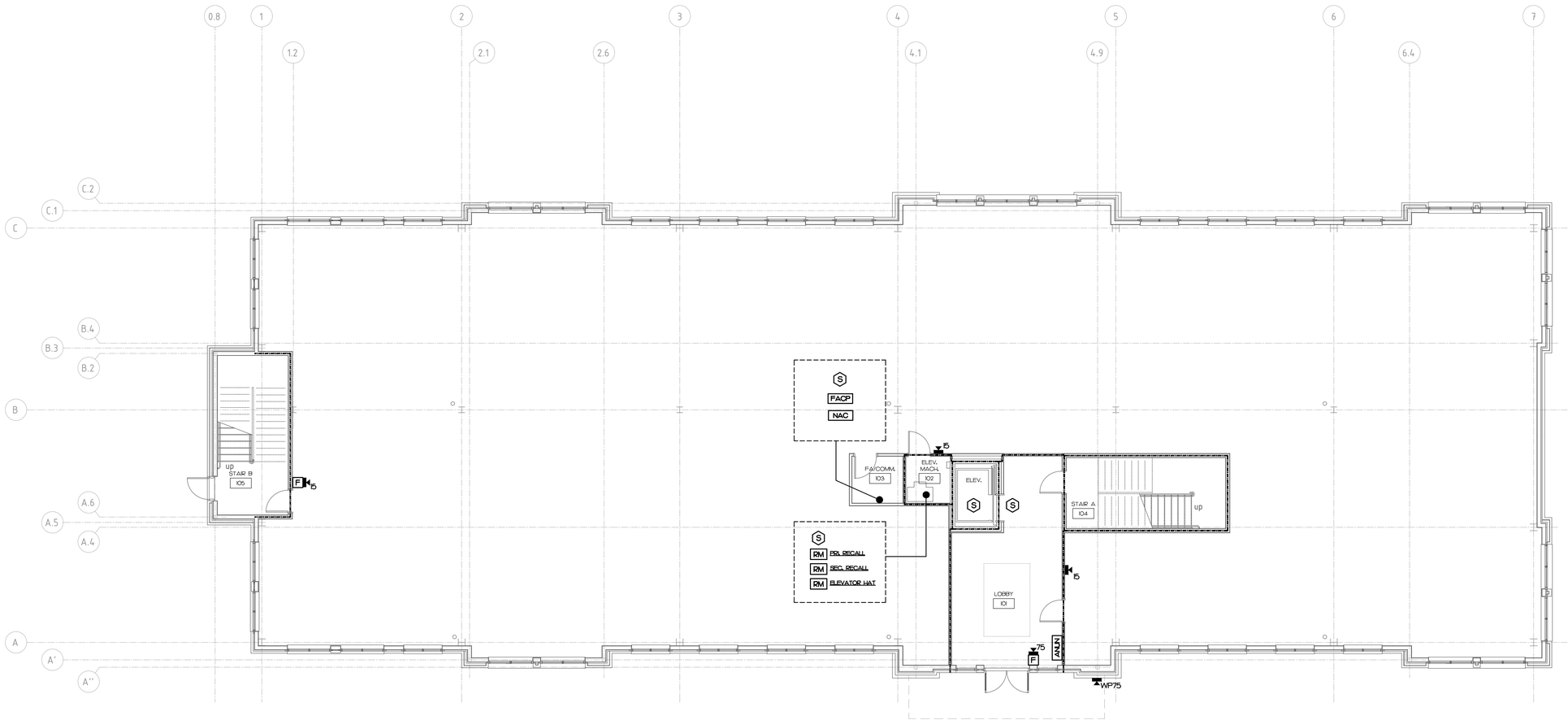

1 FA1.1 1ST FLOOR FIRE ALARM PLAN

SCALE: 1/8" = 1'-0"

16227

New Shell Building

Heritage Park West

3125 Rogers Road

Wake Forest, North Carolina

ATLANTEC ENGINEERS, PA
5201 BLUE RIDGE ROAD, SUITE 113
RALEIGH, NC 27612
(919) 571-111
1505 ST. JAMES PLACE
KINSTON, NC 28504
(252) 527-3536

PROGRESS DRAWING
NOT RELEASED FOR CONSTRUCTION

MAURER ARCHITECTURE
115.5 EAST HARGETT STREET, SUITE 300
RALEIGH, NC 27601
TEL. 919-829-4969 FAX. 919-829-0860

DATE	12.02.16
DR.	SP
CH.	DJW
PROJ. #	16096
REVISIONS	DATE

1ST FLOOR
FIRE ALARM PLAN

FA1.1

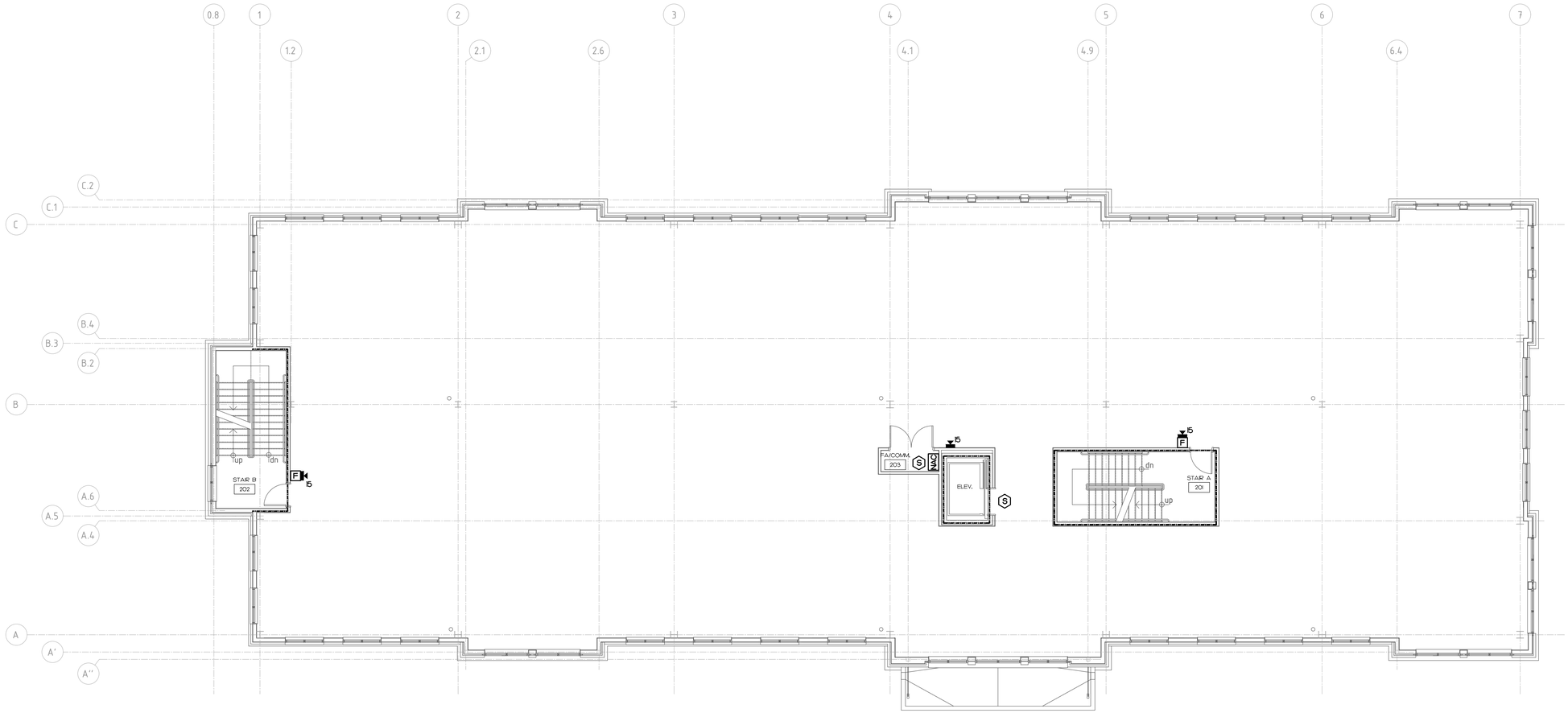

1 FA1.2 2ND FLOOR FIRE ALARM PLAN

SCALE: 1/8" = 1'-0"

16227

New Shell Building

Heritage Park West

3125 Rogers Road

Wake Forest, North Carolina

ATLANTEC ENGINEERS, PA
3201 BLUE RIDGE ROAD, SUITE 113
RALEIGH, NC 27612
(919) 571-111
1505 ST. JAMES PLACE
KINSTON, NC 28504
(252) 527-3536
16227

PROGRESS DRAWING
NOT RELEASED FOR CONSTRUCTION
WHITE

MAURER ARCHITECTURE
115.5 EAST HARGETT STREET, SUITE 300
RALEIGH, NC 27601
TEL. 919-829-4969 FAX. 919-829-0860

DATE	12.02.16
DR.	SP
CH.	DJW
PROJ. #	16096
REVISIONS	DATE

2ND FLOOR
FIRE ALARM PLAN

FA1.2

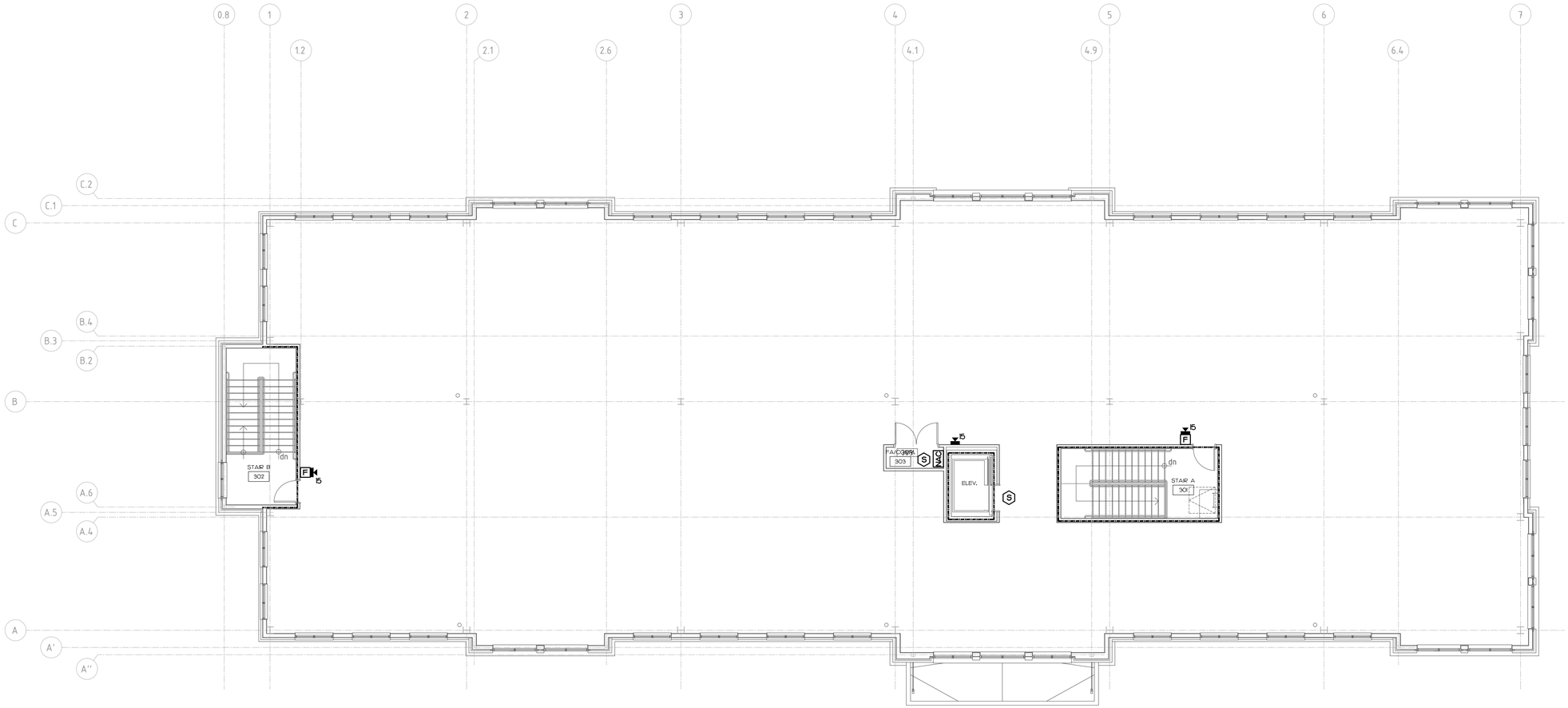

1 FA1.3 3RD FLOOR FIRE ALARM PLAN

SCALE: 1/8" = 1'-0"

New Shell Building

Heritage Park West

3125 Rogers Road

Wake Forest, North Carolina

ATLANTEC ENGINEERS, PA
3201 BLUE RIDGE ROAD, SUITE 113
RALEIGH, NC 27612
(919) 571-111
1505 ST. JAMES PLACE
KINSTON, NC 28504
(252) 527-3536
16227

PROGRESS DRAWING
NOT RELEASED FOR CONSTRUCTION
WHITE

MAURER ARCHITECTURE
115.5 EAST HARGETT STREET, SUITE 300
RALEIGH, NC 27601
TEL. 919-829-4969 FAX. 919-829-0860

DATE	12.02.16
DR.	SP
CH.	DJW
PROJ. #	16096
REVISIONS	DATE

3RD FLOOR
FIRE ALARM PLAN

FA1.3

16227

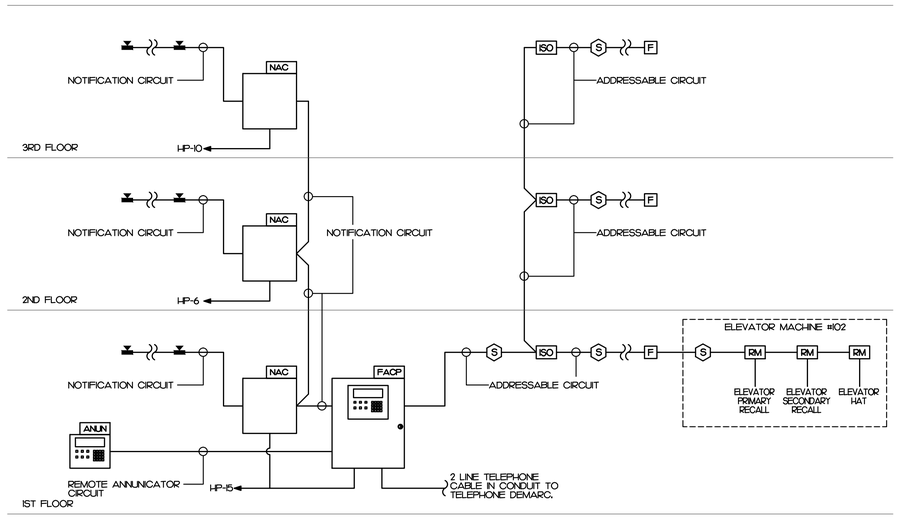

FIRE ALARM NOTES

1. SEE PLANS FOR QUANTITY AND LOCATION OF ALL EQUIPMENT
2. CONTRACTOR SHALL PROVIDE COMPLETE DOCUMENT PER 2012 FIRE CODE SECTION 907.1.1 AND 907.1.2 TO TO ENGINEER FOR APPROVAL PRIOR TO SUBMIT TO AND TESTING BY LOCAL FIRE MARSHAL'S OFFICE.
3. PLACARD THE ENTIRE FIRE ALARM SYSTEM. PROVIDE PANEL AND CIRCUIT NUMBERS ON A NAME PLATE AFFIXED TO THE FACE OF THE FIRE ALARM CONTROL PANEL.
4. CONTRACTOR SHALL PROVIDE ZONE MAPS COMPLETE WITH ADDRESSES FOR EACH FIRE ALARM DEVICE IN WOODEN FRAME ADJACENT TO THE NEW FIRE ALARM CONTROL PANEL.
5. ELECTRICAL CONTRACTOR SHALL PROVIDE BATTERY CALCULATIONS AND CUT SHEETS FOR FIRE ALARM SYSTEM TO ENGINEER FOR APPROVAL.
6. ALL WIRING SHALL BE SUPERVISED.
7. ALL WIRING SHALL BE PER MANUFACTURER'S SPECIFICATIONS.
8. ADDRESSABLE ANALOG CIRCUIT SHALL BE:
   - WIRING SHALL BE 'CLASS A'.
   - MINIMUM CAPACITY OF ANALOG SENSORS PER LOOP SHALL BE 96.
   - MINIMUM CAPACITY OF ADDRESSABLE MONITORING DEVICES PER LOOP SHALL BE 48.
   - MINIMUM CAPACITY OF ADDRESSABLE CONTROL RELAY MODULES PER LOOP SHALL BE 48.
9. ALL WIRING IN WALLS OR FURRED SPACES SHALL BE IN CONDUIT.
10. WHERE PERMITTED BY CODE, WIRING ABOVE ACCESSIBLE CEILINGS MAY BE RUN EXPOSED AND THE FOLLOWING REQUIREMENTS SHALL BE MET:
    - WIRING SHALL BE PLENUM RATED WHERE APPLICABLE.
    - PROVIDE BRIDLE RINGS FOR INDEPENDENT FIRE ALARM CABLE SUPPORT UNLESS SPECIFICALLY NOTED OTHERWISE. ANALOG LOOP WIRING INCOMING AND OUTGOING SHALL NOT BE SUPPORTED IN THE SAME BRIDLE RING.
11. ALL NOTIFICATION CIRCUIT WIRING SHALL BE 'CLASS B'.
12. PROVIDE WITH 'SYNC MODULE' AS REQUIRED PER NFPA 72.
13. FURNISH NOTIFICATION CIRCUITS AS REQUIRED TO ACCOMMODATE CIRCUIT LOADING. NO NOTIFICATION CIRCUIT SHALL BE LOADED TO MORE THAN 80% CAPACITY.
14. PROVIDE SOUND (dB) AND CANDELA (Cd) RATINGS FOR ALL HORN/STROBE DEVICES PER NFPA 72. ALL VISIBLE NOTIFICATION APPLIANCES SHALL BE SYNCHRONIZED PER NFPA 72, 18.5.5.5.7 AND 18.5.3.6.
15. A DECIBEL LEVEL OF (15 dB ABOVE AMBIENT ON NFPA 72, TABLE A.18.4.3) SHALL BE MAINTAINED IN ALL GENERAL AREAS AND 100 dB (15 dB ABOVE AN AMBIENT OF 85 dB IN NFPA 72, 18.4.3.1) SHALL BE MAINTAINED IN ALL MECHANICAL EQUIPMENT ROOMS PER NFPA 72 AND THE 2012 NORTH CAROLINA STATE BUILDING CODE (SECTION 907.5.2).
16. PROVIDE ELEVATOR CAPTURE SIGNALS PER N.C. DEPARTMENT OF LABOR REQUIREMENTS.
17. PROVIDE ELEVATOR SHUNT TRIP ACTIVATION PER N.C. DEPARTMENT OF LABOR REQUIREMENTS. PROVIDE RELAYS AND MODULES AS REQUIRED TO OPERATE SHUNT TRIP BREAKER.
18. NO OTHER DEVICES SHALL AFFECT ELEVATOR OPERATIONS.
19. PROVIDE WITH DIGITAL ALARM COMMUNICATOR (DACT). DACT SHALL HAVE CAPABILITY TO HANDLE 2 PHONE LINES. FIELD COORDINATE TYPE MATCH MONITORING COMPANY.

FIRE ALARM SYSTEM INPUT/OUTPUT MATRIX

SYSTEM OUTPUTS — FACP ANNUNCIATION | NOTIFICATION | REQUIRED FIRE SAFETY CONTROL

	SYSTEM INPUTS	A ACTUATE COMMON ALARM SIGNAL INDICATOR	B ACTUATE AUDIBLE ALARM SIGNAL	C ACTUATE COMMON SUPERVISORY SIGNAL INDICATOR	D ACTUATE AUDIBLE SUPERVISORY SIGNAL	E ACTUATE COMMON TROUBLE SIGNAL INDICATOR	F ACTUATE AUDIBLE TROUBLE SIGNAL	G ACTUATE ZONE OR DEVICE ADDRESS ALARM INDICATOR	H DISPLAY GENERAL EVACUATION SIGNAL	I ACTUATE GENERAL EVACUATION SIGNAL	J DISPLAY CHANGE OF STATUS	K TRANSMIT FIRE ALARM SIGNAL TO CENTRAL STATION	L TRANSMIT SUPERVISORY SIGNAL TO CENTRAL STATION	M TRANSMIT TROUBLE SIGNAL TO CENTRAL STATION	N RECALL ELEVATOR TO RECALL FLOOR	O RECALL ELEVATOR TO ALTERNATE RECALL FLOOR	P ACTUATE WARNING TO ELEVATOR CABS	Q	R	S	T	U	V	W	X	Y	
1	FIRE ALARM SYSTEM AC POWER FAILURE					●	●						●														1
2	FIRE ALARM SYSTEM LOW BATTERY					●	●						●														2
3	OPEN CIRCUIT					●	●						●														3
4	GROUND FAULT					●	●						●														4
5	NOTIFICATION APPLIANCE CIRCUIT SHORT					●	●						●														5
6	BUILDING MANUAL PULL STATIONS	●	●					●	●	●	●																6
7	CORRIDOR SMOKE DETECTORS	●	●					●	●	●	●				●												7
8	AREA SMOKE DETECTORS	●	●					●	●	●	●				●												8
9	ELEV EQUIP RM AREA SMOKE DETECTOR	●	●					●	●	●	●				●		●										9
10	ELEV LOBBY SMOKE DETECTORS - UPPER FLOORS	●	●					●	●	●	●				●												10
11	ELEV LOBBY SMOKE DETECTOR - RECALL FLOOR	●	●					●	●	●	●					●	●										11
		A	B	C	D	E	F	G	H	I	J	K	L	M	N	O	P	Q	R	S	T	U	V	W	V	W	

1 FA2.1 FIRE ALARM RISER AND NOTES

SCALE: NOT TO SCALE

NFPA 72 AND ADA DEVICE INSTALLATION REQUIREMENTS

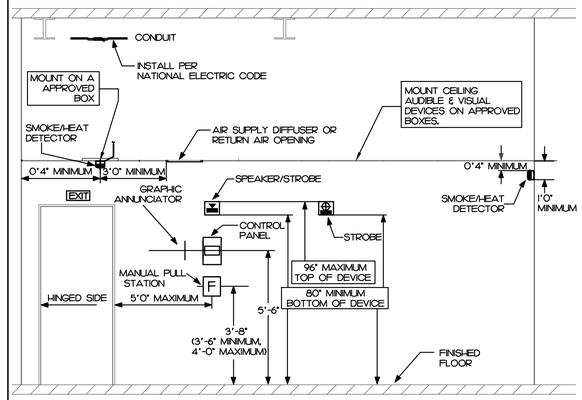

2 FA2.1 FIRE ALARM DEVICE INSTALLATION DETAIL

SCALE: NOT TO SCALE

SYMBOL LEGEND

SYMBOL	DESCRIPTION	REMARKS
S	SMOKE DETECTOR, PHOTOELECTRIC INTELLIGENT, ADDRESSABLE.	FIRELITE, EST GAMEWELL
F	FIRE ALARM PULLSTATION. MOUNT 42" A.F.F. ADDRESSABLE.	FIRELITE, EST GAMEWELL
RM	RELAY CONTROL MODULE ADDRESSABLE.	FIRELITE, EST GAMEWELL
ISO	ISOLATOR MODULE	FIRELITE, EST GAMEWELL
'XX'	FIRE ALARM STROBE/HORN. MOUNT 80" A.F.F. 75 dBA SOUND LEVEL. "XX" INDICATES CANDELA RATING.	FIRELITE, EST GAMEWELL
WP 'XX'	FIRE ALARM STROBE/HORN. MOUNT 80" A.F.F. 75 dBA SOUND LEVEL. "XX" INDICATES CANDELA RATING.	FIRELITE, EST GAMEWELL
FACP	FIRE ALARM CONTROL PANEL, SURFACE MOUNTED. ADDRESSABLE.	FIRELITE, EST GAMEWELL
ANUN	FIRE ALARM REMOTE ANNUNCIATOR, FLUSH MOUNTED. ADDRESSABLE.	FIRELITE, EST GAMEWELL
NAC	FIRE ALARM NOTIFICATION APPLIANCE POWER CABINET SURFACE MOUNTED.	FIRELITE, EST GAMEWELL
	1 HOUR WALL	
A.F.C.	ABOVE FINISHED CEILING	
A.F.F.	ABOVE FINISHED FLOOR - NOTE ALL MOUNTING DIMENSIONS GIVEN ARE TO THE BOTTOM OF THE OUTLET BOX	

NFPA 72 AUDIBLE AND VISIBLE NOTIFICATION MATRIX

MAXIMUM dB: 110		MINIMUM dB: 70		AVERAGE AMBIENT dB: 55		
ROOM NAME	FLOOR	AUDIBLE NOTIFICATION		FIELD MEASURED	VISIBLE NOTIFICATION	
		PROVIDED	NOT PROVIDED	dB LEVEL	PROVIDED	NOT PROVIDED
LOBBY	101	■	□		■	□
ELEV. MACH.	102	■	□		□	■
FA/COMM.	103	■	□		□	■
STAIR A	104	□	■		□	■
STAIR B	105	□	■		□	■
1ST FLOOR SHELL SPACE		■	□		■	□
STAIR A	201	□	■		□	■
STAIR B	202	□	■		□	■
FA/COMM.	203	■	□		□	■
2ND FLOOR SHELL SPACE		■	□		■	□
STAIR A	301	□	■		□	■
STAIR B	302	□	■		□	■
FA/COMM.	303	■	□		□	■
3RD FLOOR SHELL SPACE		■	□		■	□

VISUAL RATING IS NOT PROVIDED FOR FULL AREA COVERAGE.

3 FA2.1 FIRE ALARM NOTIFICATION MATRIX

SCALE: NOT SCALE

New Shell Building
Heritage Park West
3125 Rogers Road
Wake Forest, North Carolina

ATLANTEC ENGINEERS, PA
3201 BLUE RIDGE ROAD, SUITE 113
RALEIGH, NC 27612
(919) 571-111
825 ST. JAMES PLACE
KINSTON, NC 28504
(252) 527-3336
16227

PROGRESS DRAWING NOT RELEASED FOR CONSTRUCTION

MAURER ARCHITECTURE
115.5 EAST HARGETT STREET, SUITE 300
RALEIGH, NC 27601
TEL. 919-829-0860 FAX. 919-829-4969

DATE	12.02.16
DR.	SP
CH.	DJW
PROJ. #	16096
REVISIONS	DATE

FIRE ALARM RISER
NOTES
DETAILS
LEGEND

FA2.1

16227